FTECH

Dikiş Otomat Sistemleri

MODEL FT-2101

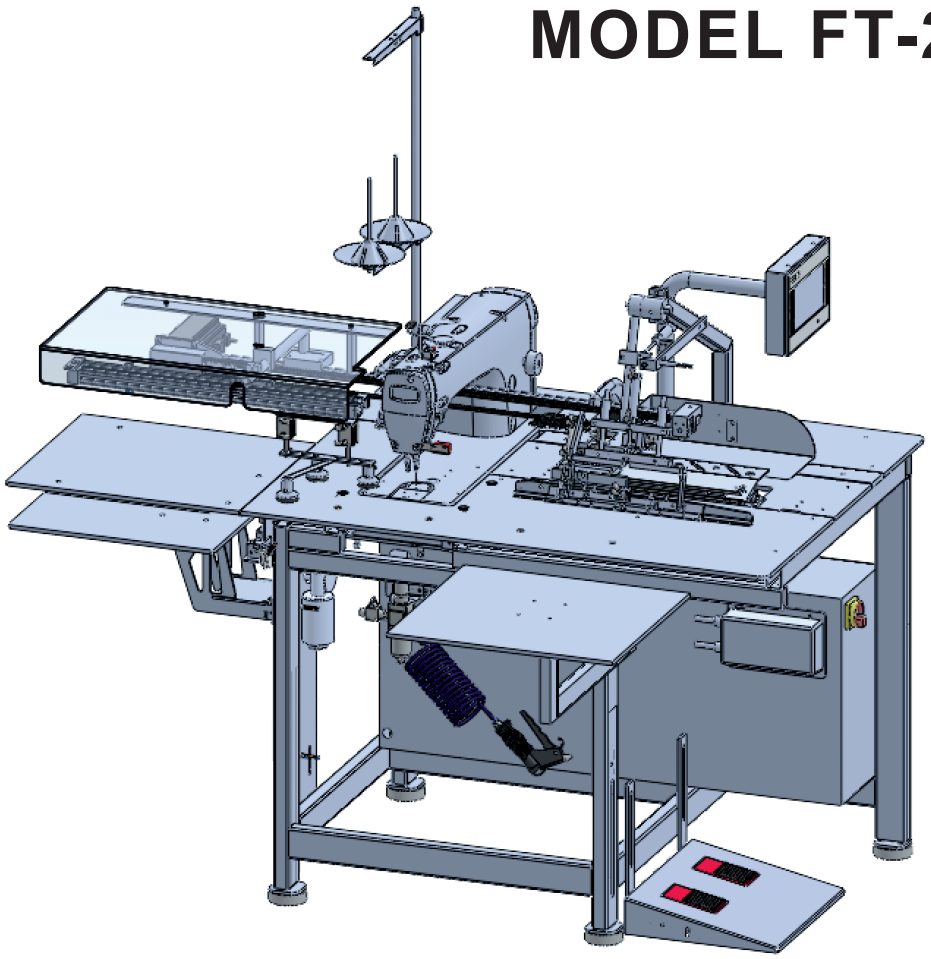

SEWING UNIT FOR AUTOMATIC FOLDING AND SEWING OF POCKET FACINGS

PARTS MANUAL

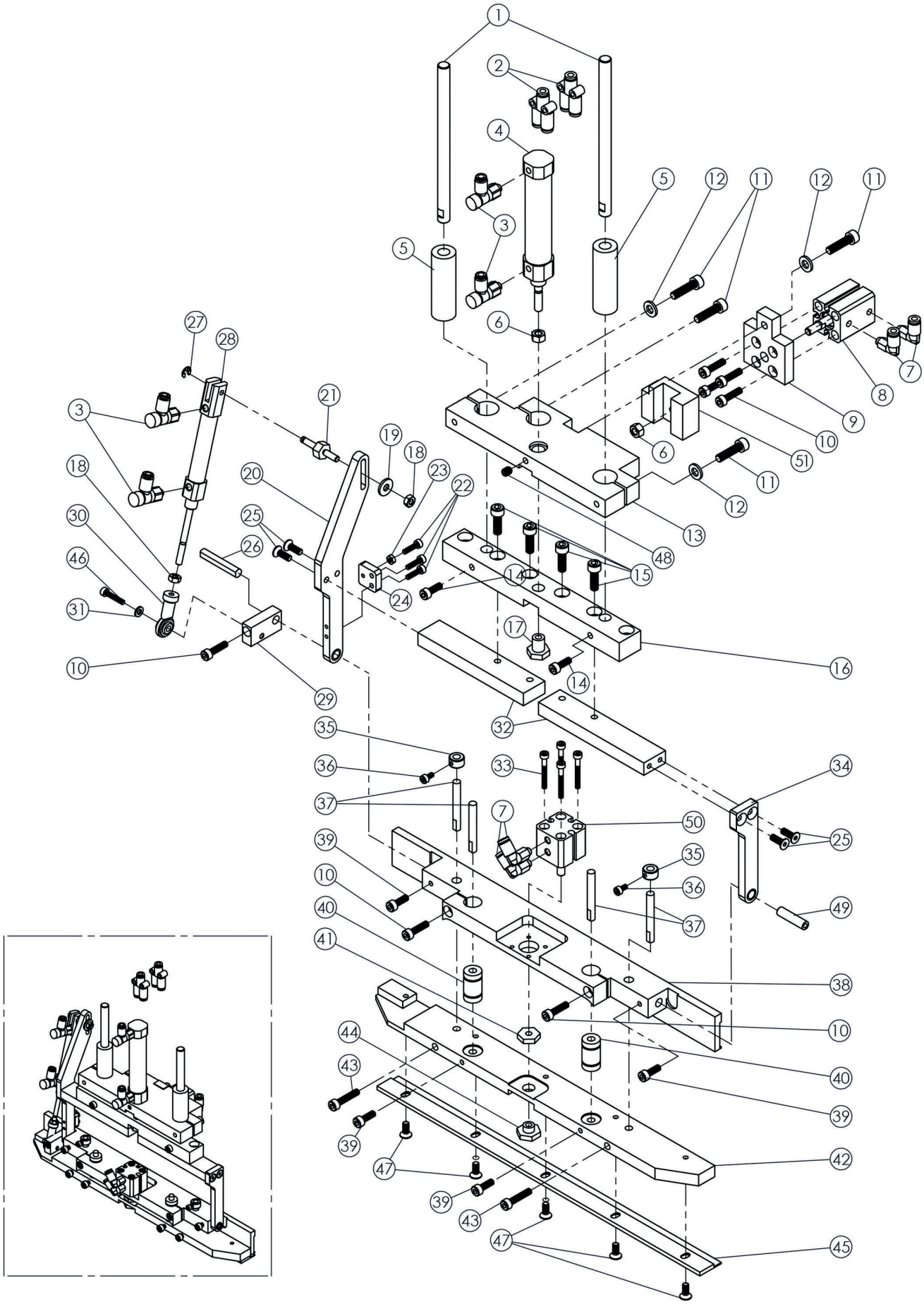

DET	PART NUMBERT	DESCRIPTION
1	11-10175-00-000	Shaft
2	16-30010-00-404	Y-Joint
3	16-40007-05-404	Speed Controller
4	16-10005-00-100	Cylinder
5	14-50002-00-000	Bushing
6	02-11005-05-000	Nut
7	16-30006-05-204	Elbow Joint
8	16-10014-00-200	Cylinder
9	11-10358-00-000	Cylinder Support
10	01-11037-04-016	Screw
11	01-11051-05-020	Screw
12	03-11005-05-000	Washer
13	11-10343-00-000	Loader Connecting
14	01-11036-04-014	Screw
15	01-11050-05-016	Screw
16	11-10345-00-000	Loader Connecting
17	11-10111-00-000	Shoulder Nut
18	02-11004-04-000	Nut
19	03-21002-04-012	Washer
20	11-10352-00-002	Fix Lever
21	11-10347-00-000	Cylinder Pin
22	01-11018-03-012	Screw
23	02-11003-03-000	Nut
24	11-10185-00-000	Stop
25	01-51016-04-012	Screw
26	13-30010-00-000	Connecting Pin

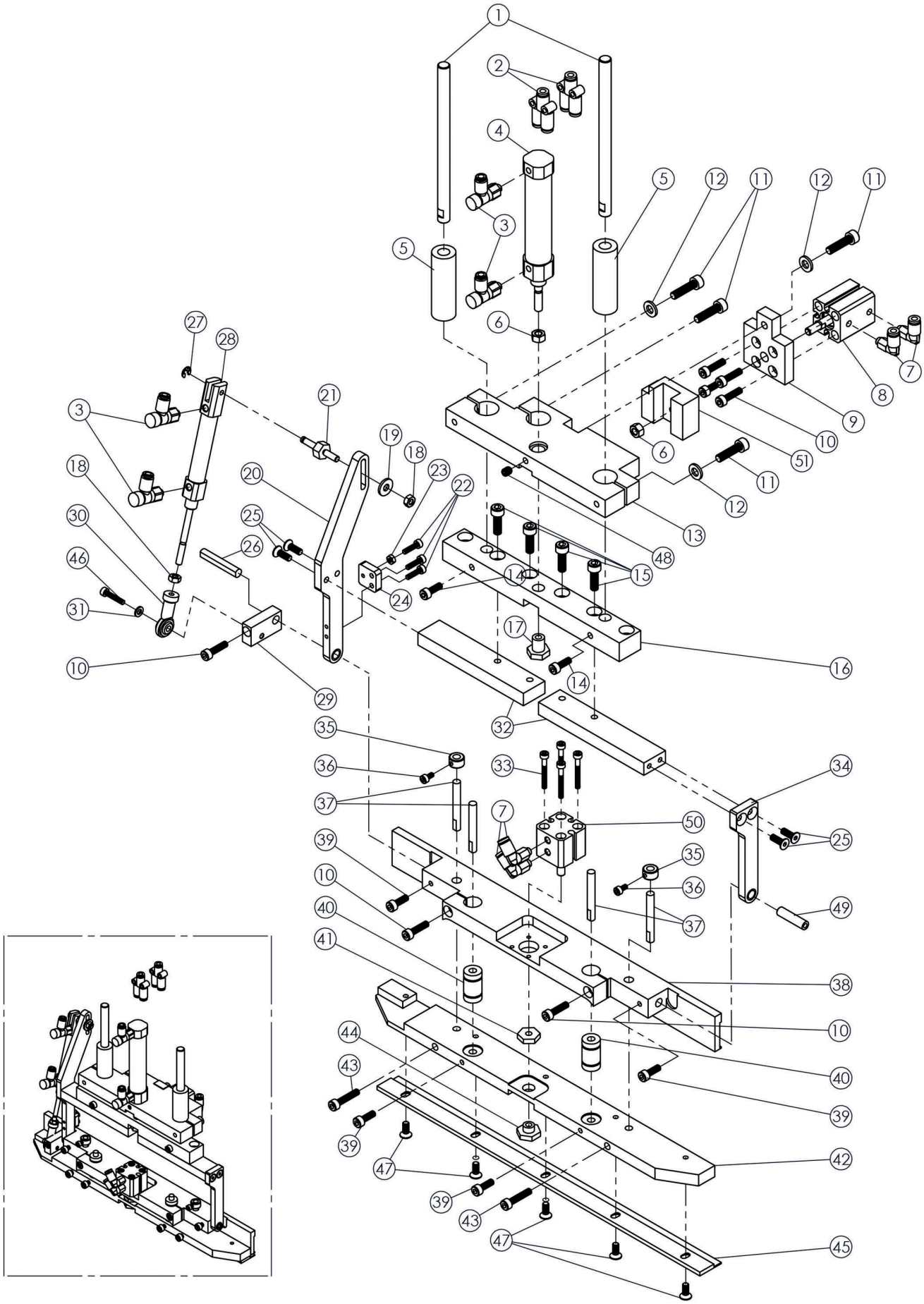

DET	PART NUMBERT	DESCRIPTION
27	04-10002-04-000	Retainer
28	16-10011-00-100	Cylinder
29	11-10374-00-000	Loader Stop
30	17-10006-04-000	Rod End
31	03-11003-03-000	Washer
32	11-10351-00-000	Connecting Lever
33	01-11023-03-025	Screw
34	11-10353-00-002	Fix Lever
35	11-10186-00-000	Collar
36	01-11015-03-006	Screw
37	11-10149-00-000	Guide Shaft
38	11-10180-00-000	Loader Block
39	01-11035-04-012	Screw
40	07-10007-05-012	Bearing
41	11-10150-00-000	Nut
42	11-10359-00-000	Loader Block
43	01-11038-04-020	Screw
44	11-10191-00-000	Shoulder Nut
45	11-10105-00-000	Patch Clamp
46	01-11020-03-020	Screw
47	01-51014-04-008	Screw
48	01-31021-05-008	Screw
49	11-10143-00-000	Connecting Pin
50	16-10012-00-200	Cylinder
51	11-10357-00-000	Guide Block

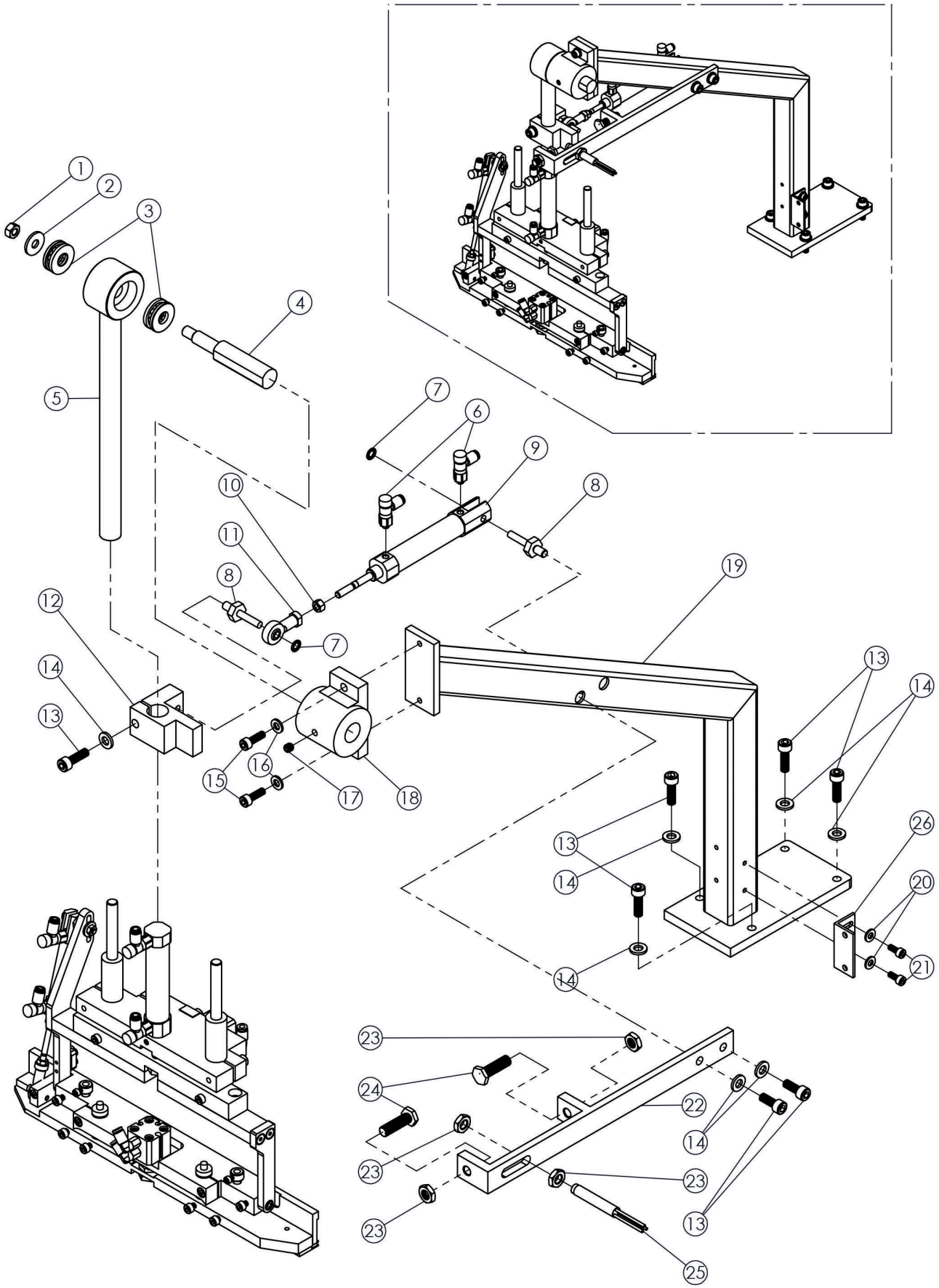
1
2
3
4
5
6
7
8
9
10
11
12
13
14
15
16
17
18
19
20
21
22
23
24
25
26

DET	PART NUMBERT	DESCRIPTION
1	02-21004-06-000	Nut
2	03-21007-06-015	Washer
3	07-10010-10-024	Bearing
4	11-10163-00-000	Moving Lever Pin
5	11-10165-00-000	Patch Loader Lever
6	16-40007-05-404	Speed Controller
7	04-50004-06-000	Retainer
8	11-10196-00-000	Cylinder Pin
9	16-10034-00-100	Cylinder
10	02-11005-05-000	Nut
11	17-10003-05-000	Rod End
12	11-10181-00-000	Patch Loader Stop
13	01-11070-06-020	Screw
14	03-11006-06-000	Washer
15	01-11050-05-016	Screw
16	03-11005-05-000	Washer
17	01-31037-06-006	Screw
18	11-10179-00-000	Lever Pin Holder
19	11-10222-00-000	Patch Loader Holder
20	03-11004-04-000	Washer
21	01-11034-04-010	Screw
22	11-10138-00-000	Patch Loader Space Moving Lever
23	02-91002-08-100	Nut
24	01-90001-08-030	Screw
25	10-50009-00-000	Metal Sensing Switch
26	11-10211-00-000	Patch Tray Support

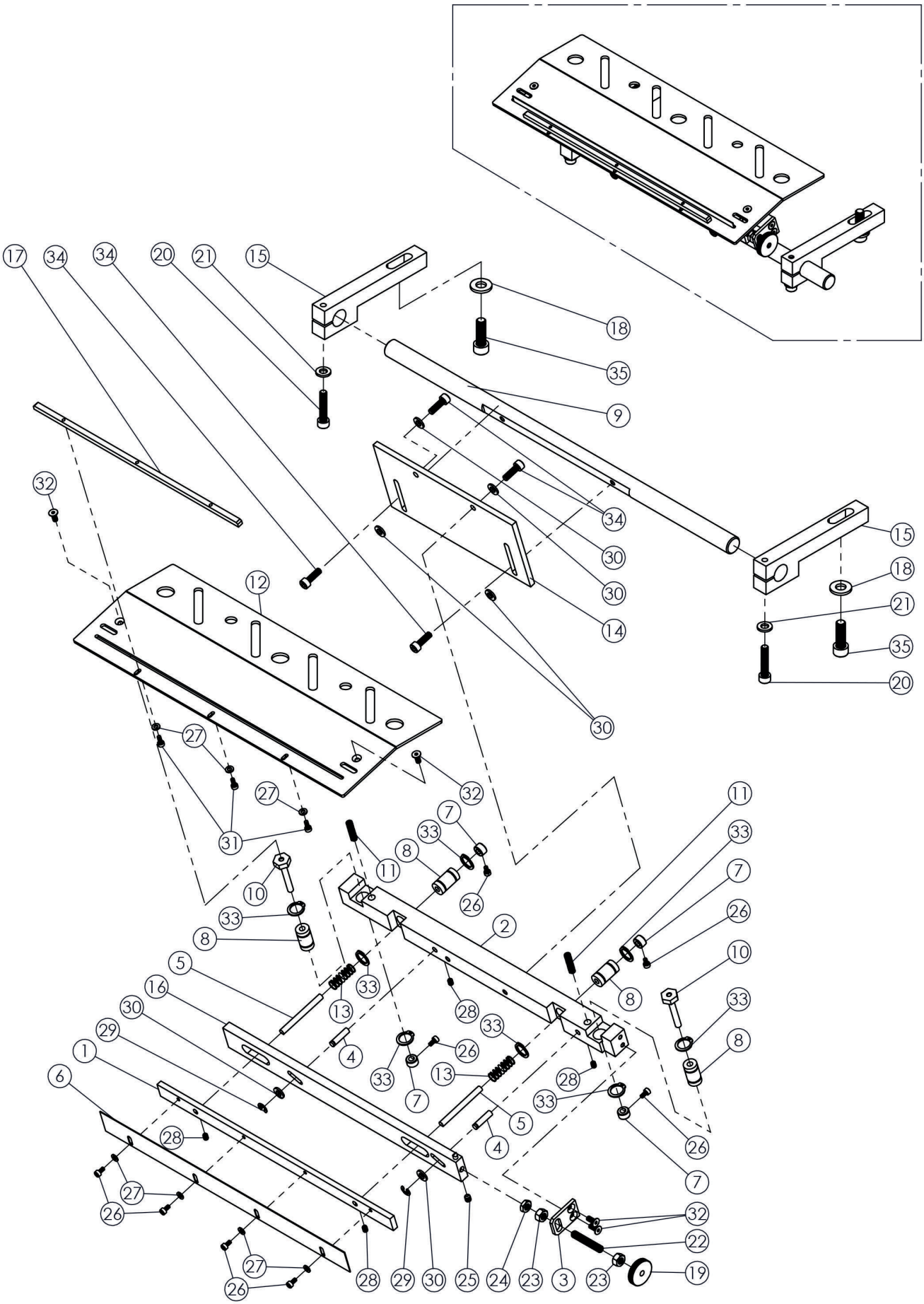
17
34
34
20
21
15
18
35
9
32
34
30
30
14
12
15
18
21
35
20
30
27
32
27
31
11
7
33
8
26
10
33
8
2
5
16
30
29
1
6
28
27
26
33
13
4
28
33
26
33
13
7
5
4
11
33
7
26
10
33
8
8
26
7
32
22
19
28
29
30
25
24
23
3
23
27
26
27
26

DET	PART NUMBERT	DESCRIPTION
1	11-10230-00-000	Guide Support
2	11-10206-00-000	Guide Lever
3	11-10154-00-000	Support
4	11-10215-00-000	Shaft
5	13-20001-00-000	Shaft
6	11-10212-00-000	Guide
7	11-10186-00-000	Coller
8	07-10007-05-012	Bearing
9	11-10237-00-000	Shaft
10	11-10233-00-000	Lever Pin
11	05-20001-00-000	Spring
12	11-10234-00-000	Patch Space
13	05-20005-00-000	Spring
14	11-10216-00-000	Plate
15	11-10169-00-000	Block
16	11-10231-00-000	Adjusment Plate
17	11-10164-00-000	Guiding Plate
18	03-11007-08-000	Washer
19	11-10146-00-000	Adjusment Sleeve
20	01-11072-06-030	Screw
21	03-11006-06-000	Washer
22	01-31046-06-035	Screw
23	02-31004-06-000	Nut
24	02-11006-06-000	Nut
25	01-31020-05-005	Screw
26	01-11015-03-006	Screw
27	03-11003-03-000	Washer
28	01-31009-04-006	Screw
29	04-10003-05-000	Retainer
30	03-21003-05-015	Washer
31	01-11016-03-008	Screw
32	01-51015-04-010	Screw
33	04-60010-12-000	Retainer
34	01-11050-05-016	Screw
35	01-11090-08-025	Screw

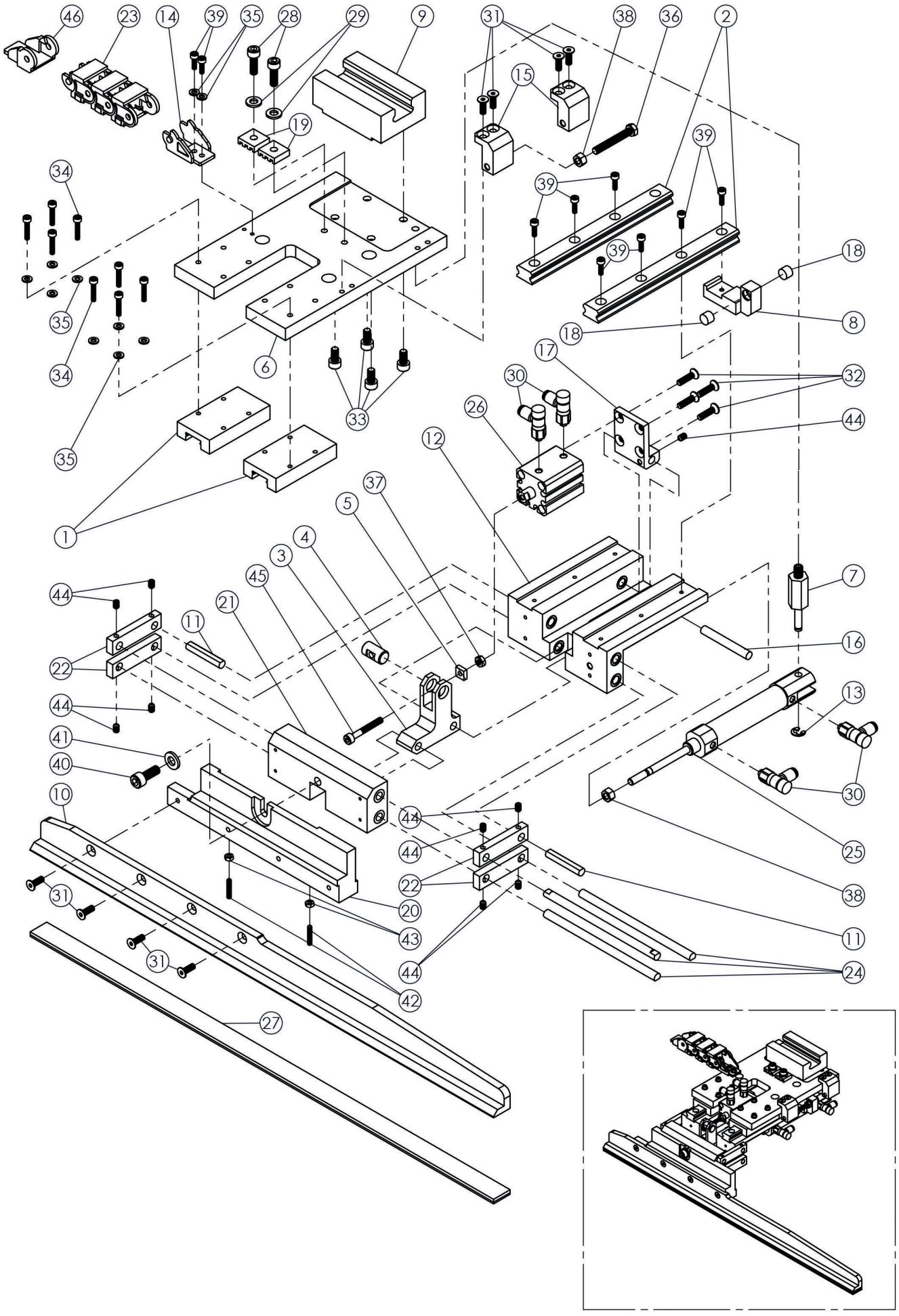
46
23
14
39
35
28
29
9
31
38
36
2
15
19
34
39
39
18
8
35
34
6
33
18
17
30
32
26
44
12
35
1
37
5
4
3
45
21
11
44
22
44
41
40
10
31
20
43
44
42
27
7
16
13
30
25
38
11
24
44
44
22

DET	PART NUMBERT	DESCRIPTION
1	20-20004-00-000	Linear Guideway
2	20-10006-00-000	Linear Rail
3	11-10155-00-000	Clamp Moving Lever
4	11-10208-00-000	Connecting Pin
5	11-10214-00-000	Nut
6	11-10219-00-000	Carriage Plate
7	11-10348-00-000	Cylinder Pin
8	11-10189-00-000	Stop Bracket
9	20-20003-00-000	Linear Guideway
10	11-10235-00-000	Clamp Arm
11	13-30010-00-000	Shaft
12	11-10204-00-007	Carriage Block
13	04-10004-06-000	Retainer
14	15-90005-00-000	Chain Connection
15	11-10144-00-000	Stop
16	11-10147-00-000	Shaft
17	11-10153-00-000	Cylinder Support
18	15-60005-00-000	Rubber Stop
19	11-10188-00-000	Belt Clamp
20	11-10362-00-000	Clamp Arm Holder
21	11-10360-00-005	Clamp Arm Holder
22	11-10098-00-000	Connection Plate
23	15-90006-00-000	Chain
24	11-10194-00-000	Shaft
25	16-10034-00-100	Cylinder
26	16-10018-00-200	Cylinder
27	15-60007-00-002	Clamp Rubber
28	01-11050-05-016	Screw
29	03-11005-05-000	Washer
30	16-40007-05-404	Speed Controller
31	01-51016-04-012	Screw
32	01-51018-04-016	Screw
33	01-11048-05-008	Screw
34	01-11020-03-016	Screw
35	03-11003-03-000	Washer
36	01-81042-05-035	Screw
37	02-11004-04-000	Nut
38	02-11005-05-000	Nut
39	01-11017-03-010	Screw
40	01-11069-06-016	Screw
41	03-11006-06-000	Washer
42	01-31097-03-016	Screw
43	02-11003-03-000	Nut
44	01-31009-04-006	Screw
45	01-11041-04-030	Screw
46	15-90007-00-000	Chain Connection

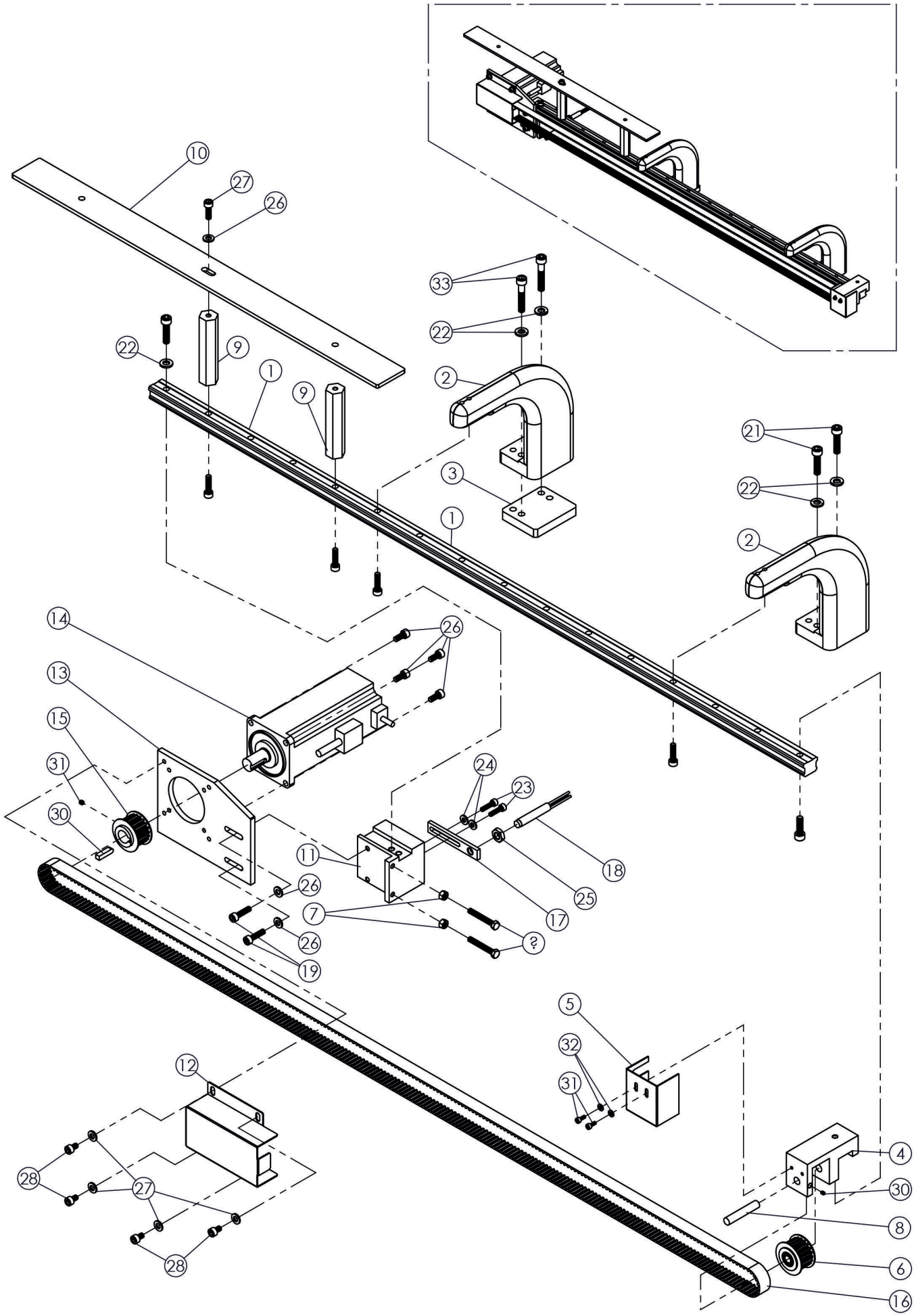
10
27
26
33
22
9
1
2
21
3
14
13
15
31
30
24
23
11
18
25
17
7
?
19
5
32
12
28
4
8
6
16

DET	PART NUMBERT	DESCRIPTION
1	20-10005-00-000	Linear Rail
2	11-10223-00-000	Linear Rail Support
3	11-10162-00-000	Spacer
4	11-10003-00-000	Pulley Holder
5	11-10159-00-000	Cover
6	08-20006-00-004	Pulley
7	02-11005-05-000	Nut
8	11-10152-00-000	Shaft
9	11-10115-00-000	Spacer
10	11-10116-00-000	Cover Plate
11	11-10182-00-000	Bracket
12	11-10239-00-000	Cover
13	11-10361-00-000	Motor Support
14	10-40019-00-000	Servo Motor 400 W
15	08-20007-00-000	Pulley
16	09-20003-00-000	Belt
17	11-10142-00-000	Sensing Switch Support
18	10-50009-00-000	Motor Sensing Switch
19	01-11051-05-020	Screw
20	01-11070-06-020	Screw
21	01-11071-06-025	Screw
22	03-11006-06-000	Washer
23	01-11037-04-016	Screw
24	03-21002-04-012	Washer
25	02-91002-08-100	Nut
26	01-11049-05-12	Screw
27	03-21003-05-015	Washer
28	01-11048-05-008	Screw
29	01-11050-05-016	Screw
30	11-10824-00-000	Key
31	01-31008-04-004	Screw
32	01-31022-05-010	Screw
33	01-11016-03-008	Screw
34	03-11003-03-000	Washer
35	01-11073-06-035	Screw
36	01-81041-05-030	Screw

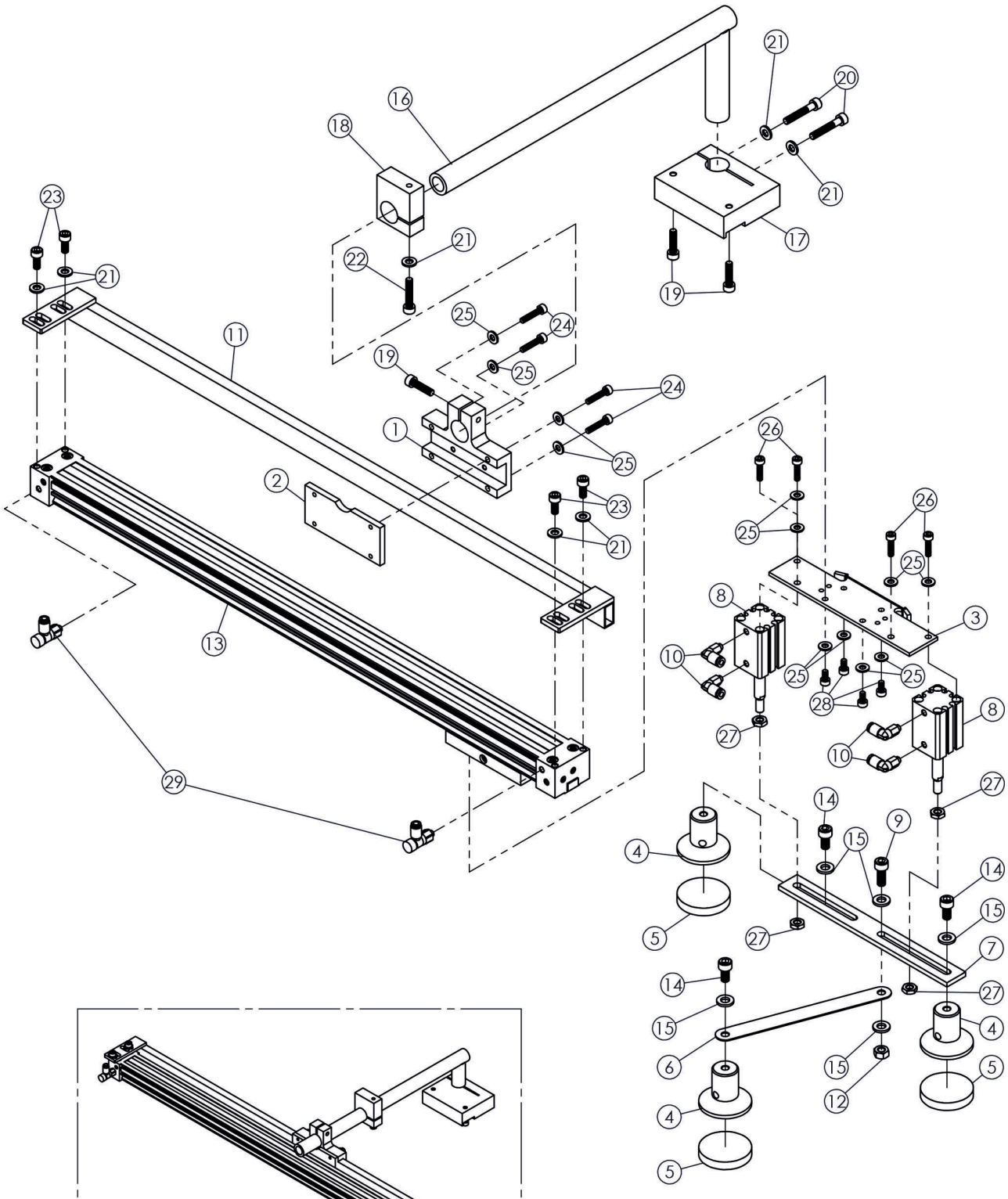
21
20
16
18
21
21
17
23
21
22
19
11
25
24
25
19
24
1
25
26
2
23
25
21
26
25
8
3
10
25
25
28
27
8
10
27
14
9
4
15
14
5
27
15
7
14
27
15
4
6
12
4
5

DET	PART NUMBERT	DESCRIPTION
1	11-10135-00-000	Cylinder Support
2	11-10167-00-000	Support Plate
3	11-10107-00-000	Cylinder Support
4	11-10178-00-000	Patch Holder
5	15-80002-00-000	Rubber
6	11-10174-00-000	Sprint Plate
7	11-10100-00-000	Patch Hoder Support
8	16-10027-00-200	Cylinder
9	01-11069-06-016	Screw
10	16-30006-05-204	Elbow Joint
11	11-10218-00-000	Cylinder Support
12	02-11006-06-000	Nut
13	16-10032-00-600	Cylinder
14	01-11068-06-012	Screw
15	03-11006-06-000	Washer
16	11-10228-00-000	Stacker Loader Holder
17	11-10148-00-000	Stacker Loader Support
18	11-10166-00-000	Cover Support
19	01-11051-05-020	Screw
20	01-11054-05-030	Screw
21	03-11005-05-000	Washer
22	01-11053-05-025	Screw
23	01-11049-05-012	Screw
24	01-11038-04-020	Screw
25	03-11004-04-000	Washer
26	01-11037-04-016	Screw
27	02-61003-06-000	Nut
28	01-11033-04-008	Screw
29	16-40009-05-404	Speed Controller

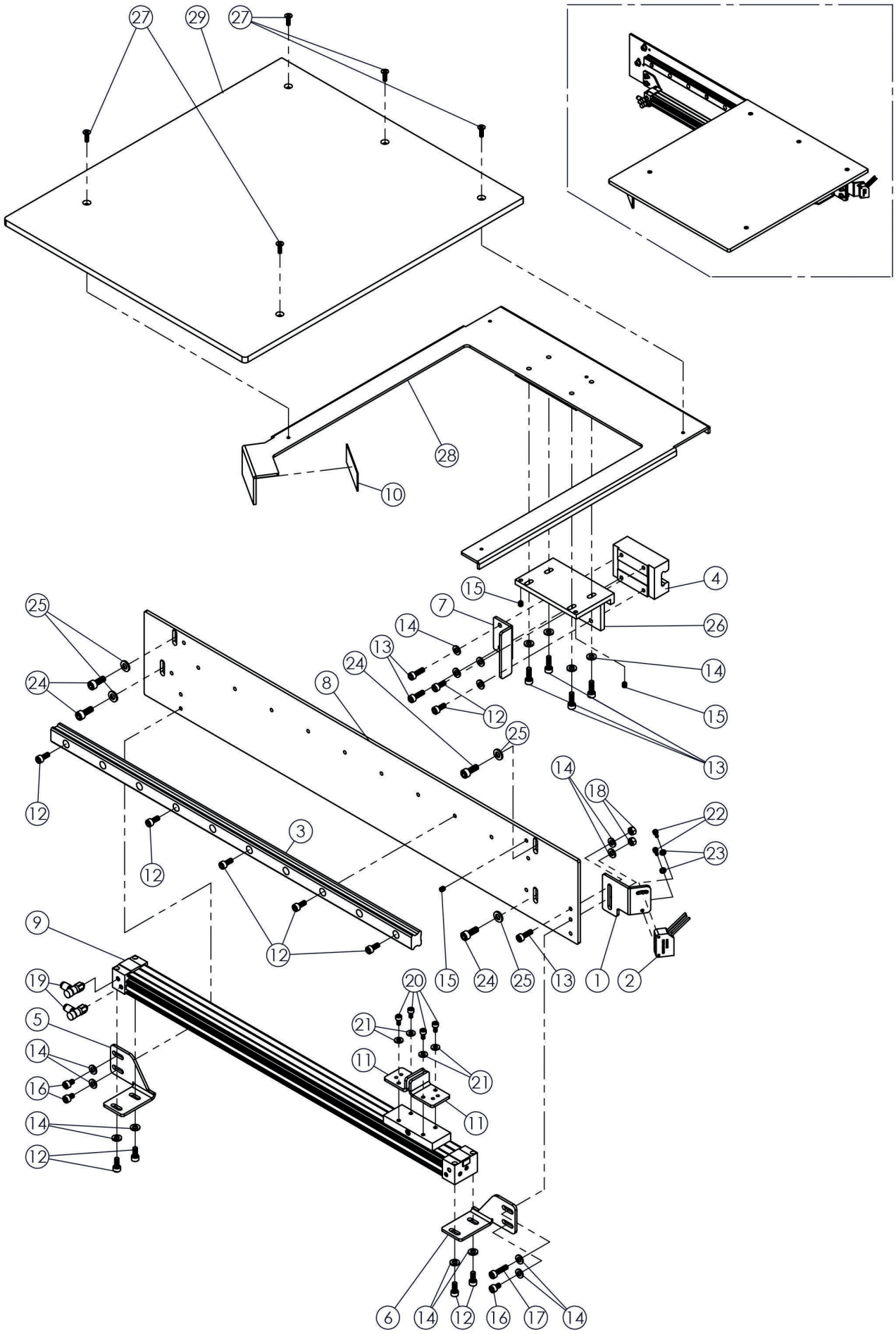
27
29
27
28
10
4
15
7
14
26
13
14
24
15
8
12
25
13
25
14
18
24
22
12
23
3
12
9
12
19
20
15
24
25
13
1
2
5
21
14
11
21
16
11
14
12
6
14
12
16
17
14

DET	PART NUMBERT	DESCRIPTION
1	11-10209-00-000	Fotocell Support
2	10-50004-00-000	Fotocell
3	20-10009-00-000	Linear Rail
4	20-20003-00-000	Linear Guideway
5	11-10113-00-000	Cylinder Support
6	11-10114-00-000	Cylinder Support
7	11-10340-00-000	Bracket
8	11-10341-00-000	Mounting Plate
9	16-10032-00-600	Cylinder
10	10-80002-00-000	Reflector Type
11	11-10101-00-000	Bracket
12	01-11049-05-012	Screw
13	01-11050-05-016	Screw
14	03-11005-05-000	Washer
15	01-31021-05-008	Screw
16	01-11047-05-006	Screw
17	01-11051-05-020	Screw
18	02-31003-05-000	Nut
19	16-40007-05-404	Speed Controller
20	01-11033-04-008	Screw
21	03-11004-04-000	Washer
22	01-11016-03-008	Screw
23	03-11003-03-000	Washer
24	01-11069-06-016	Screw
25	03-21007-06-015	Washer
26	11-10344-00-000	Linear Guideway Support
27	01-61028-04-012	Screw
28	11-10242-00-000	Table Support
29	15-10004-00-000	Table

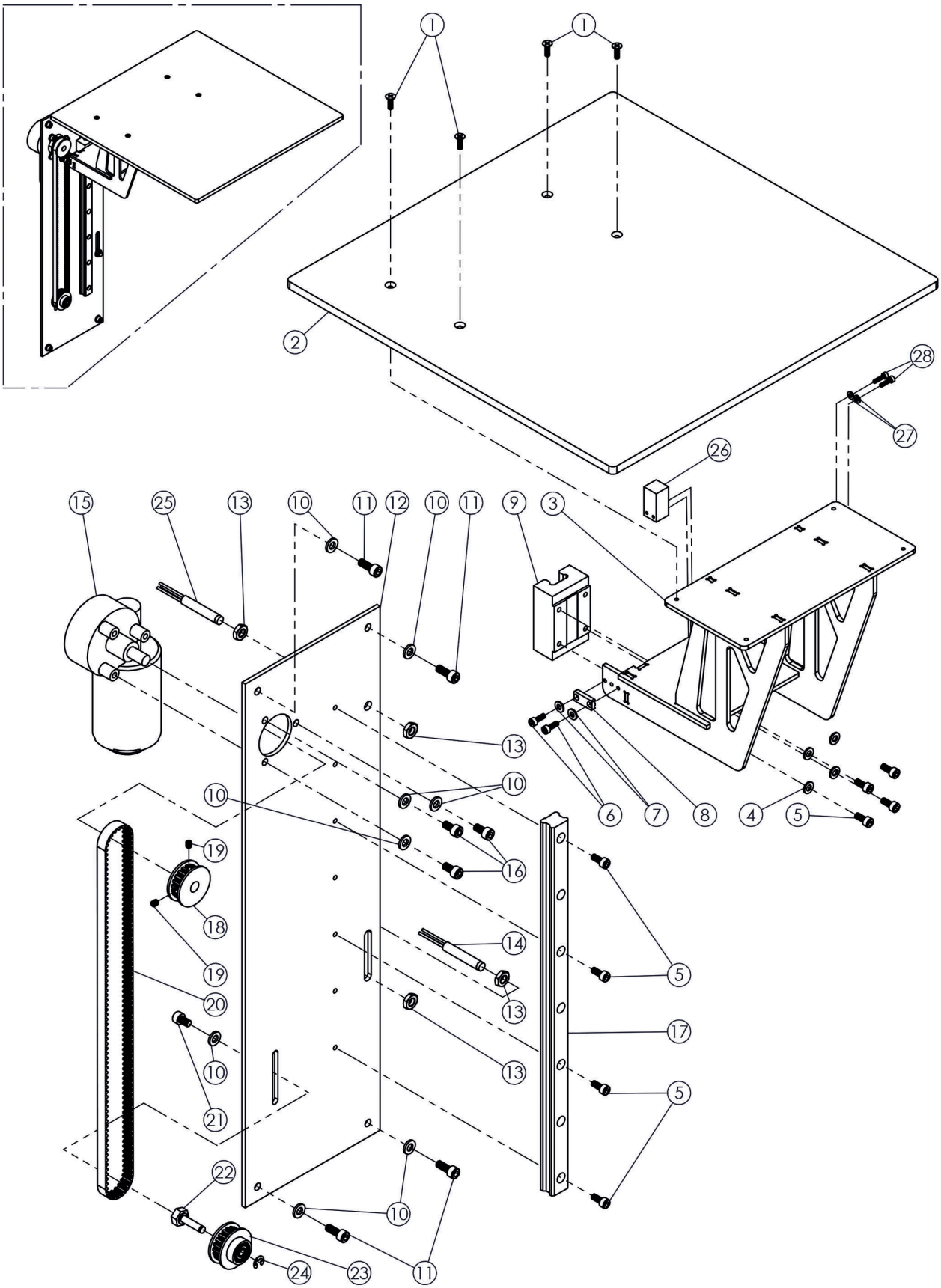
1
1
2
28
27
26
15
25
13
10
11
12
10
11
9
3
13
10
10
19
16
18
14
19
5
20
13
17
10
13
5
21
22
10
24
23
11
6
7
8
4
5

DET	PART NUMBERT	DESCRIPTION
1	01-61028-04-012	Screw
2	15-10005-00-000	Table
3	11-10355-00-000	Stacker Table Support
4	03-11005-05-000	Washer
5	01-11049-05-012	Screw
6	01-11035-04-012	Screw
7	03-11004-04-000	Washer
8	11-10213-00-000	Beld Clamp
9	20-20003-00-000	Linear Guideway
10	03-11006-04-000	Washer
11	01-11069-06-016	Screw
12	11-10350-00-000	Mounting Plate
13	02-91002-08-100	Nut
14	10-50009-00-000	Metal Sensing Switch
15	10-40004-00-000	DC Motor
16	01-11067-06-012	Screw
17	20-10008-00-000	Linear Rail
18	08-50003-00-000	Pulley
19	01-31020-05-006	Screw
20	09-60001-10-330	Belt
21	01-11067-06-010	Screw
22	11-10199-00-000	Pulley Pin
23	08-50004-00-000	Pulley
24	04-10004-06-000	Retainer
25	10-50011-00-000	Metal Sensing Switch
26	11-10349-00-000	Switch Sensing Plate
27	03-11003-03-000	Washer
28	01-11020-03-019	Screw

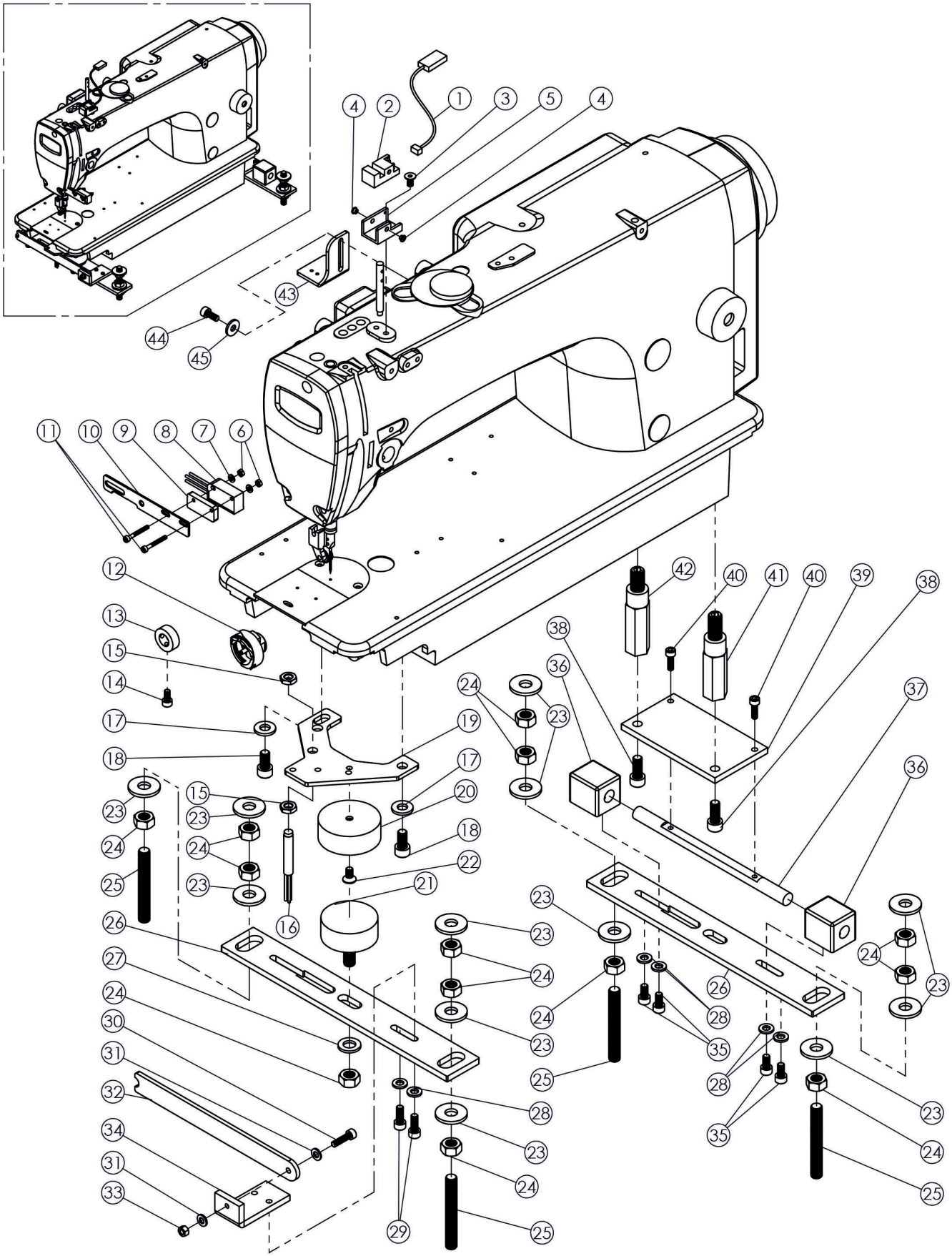
1
2
3
4
5
6
7
8
9
10
11
12
13
14
15
16
17
18
19
20
21
22
23
24
25
26
27
28
29
30
31
32
33
34
35
36
37
38
39
40
41
42
43
44
45

DET	PART NUMBERT	DESCRIPTION
1	10-20002-00-000	Top Thread Monitor Cable
2	10-50007-00-000	Top Thread Monitor
3	01-51026-05-010	Screw
4	14-60001-00-000	Thread Eyelet
5	11-10364-00-000	Top Thread Monitor Support
6	02-11003-03-000	Nut
7	03-11003-03-000	Washer
8	10-50006-00-000	Fotocell
9	11-10375-00-000	Fotocell Space
10	11-10193-00-000	Fotocell Support
11	01-11023-03-025	Screw
12	11-10246-00-003	Rotary Hook
13	11-10253-00-000	Coller
14	01-11048-05-010	Screw
15	02-91002-08-100	Nut
16	10-50009-00-000	Metal Sensing Swictch
17	03-11007-08-000	Washer
18	01-11088-08-016	Screw
19	11-10053-00-000	Mounting Bracket
20	11-10227-00-000	Rubber Support
21	15-90003-00-000	Adjustable Foot
22	01-51038-06-012	Screw
23	03-21017-10-030	Washer
24	02-11008-10-000	Nut
25	01-82002-10-080	Screw
26	11-10238-00-000	Bracket
27	03-11008-10-000	Washer
28	03-11006-06-000	Washer
29	01-11069-06-016	Screw
30	01-11051-05-020	Screw
31	03-11005-05-000	Washer
32	11-10137-00-000	Stopper Lever
33	02-11005-05-000	Nut
34	11-10097-00-000	Stopper Lever Support
35	01-11068-06-012	Screw
36	11-10171-00-000	Shaft Holder
37	13-20004-00-000	Shaft
38	01-11089-08-020	Screw
39	11-10104-00-000	Mounting Support
40	01-11050-05-016	Screw
41	11-10156-00-000	Space
42	11-10157-00-000	Space
43	11-10151-00-7200	Patch Tray Support
44	01-11049-05-012	Screw
45	03-21003-05-020	Washer

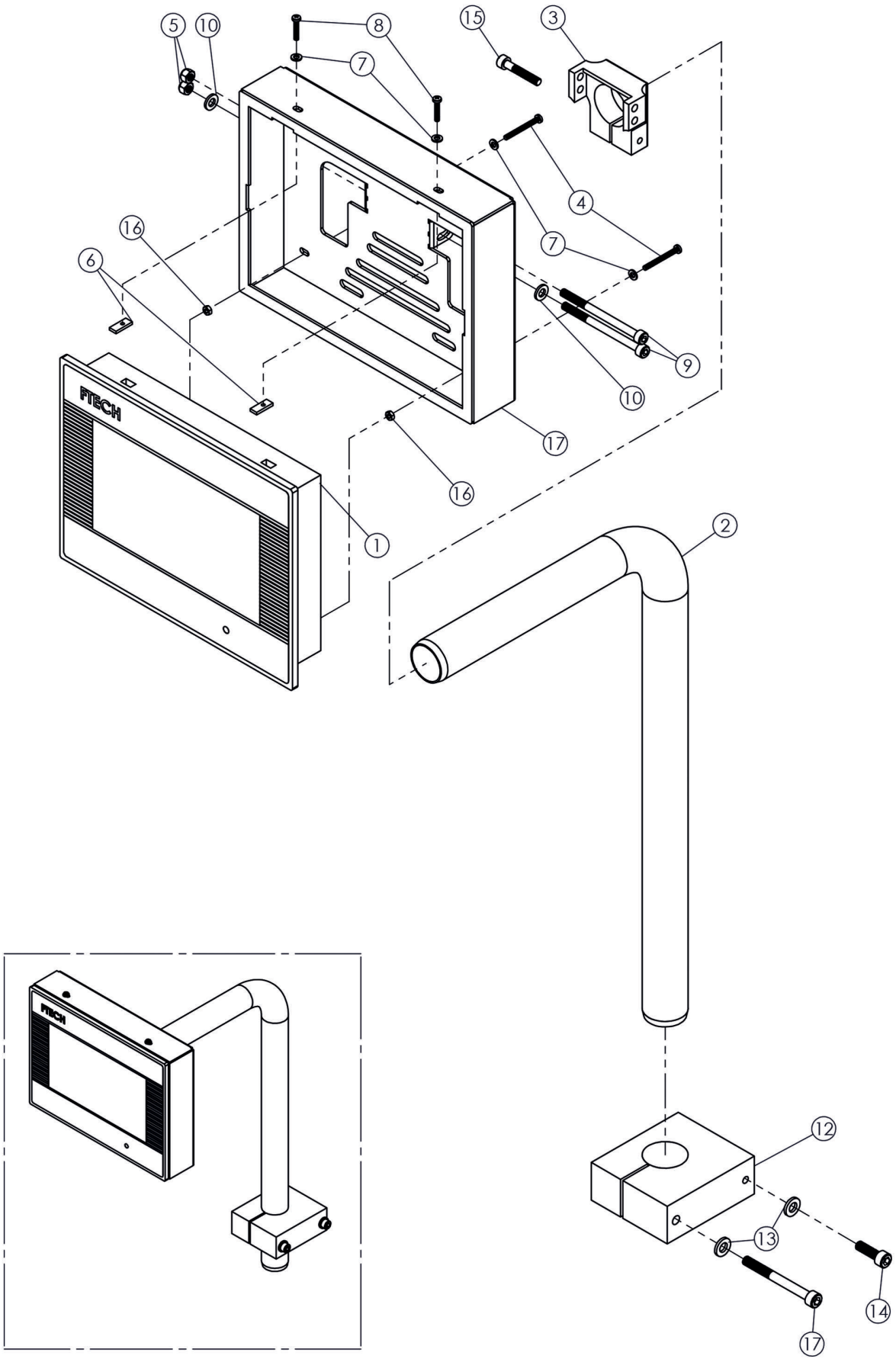
5
10
8
7
15
3
4
7
16
6
9
10
17
16
1
2
12
13
14
17

DET	PART NUMBERT	DESCRIPTION
1	10-70002-00-2101	Panel
2	11-40007-00-000	Panel Support Holder
3	11-10210-00-000	Panel Support
4	01-21024-03-030	Screw
5	02-21003-05-000	Nut
6	11-10084-00-000	Cover Mounting Nut
7	03-11003-03-000	Washer
8	01-21016-03-008	Screw
9	01-11062-05-070	Screw
10	03-11005-00-000	Washer
11	01-11078-06-060	Screw
12	11-10170-00-000	Support
13	03-11006-06-000	Washer
14	01-11070-06-020	Screw
15	01-11054-05-030	Screw
16	02-11003-03-000	Nut
17	11-10260-00-000	Panel Mounting Cover

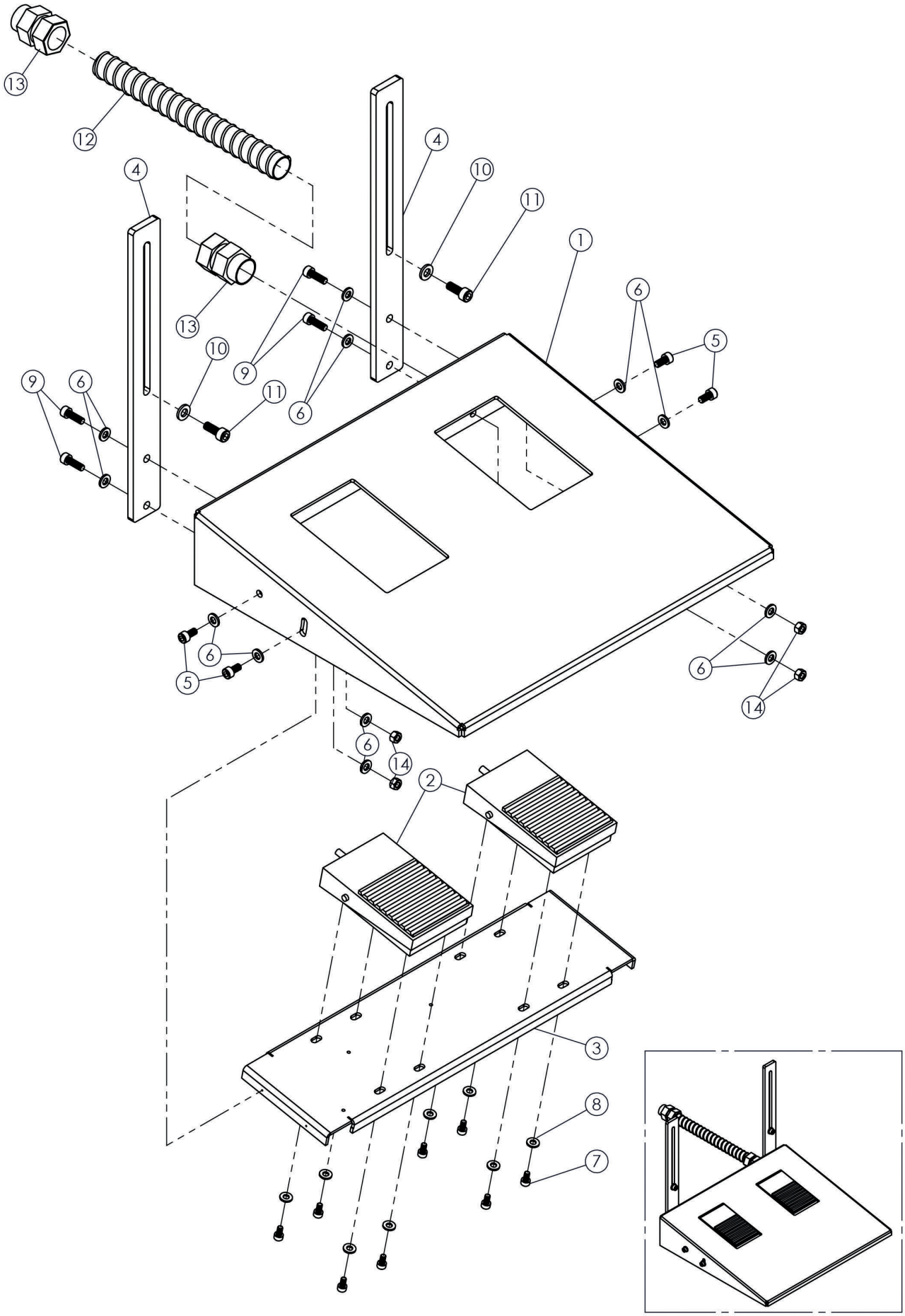
13
12
4
10
11
1
6
5
9
6
13
10
9
11
6
6
5
6
14
6
14
2
3
8
7

DET	PART NUMBERT	DESCRIPTION
1	11-10225-00-000	Treadle
2	10-30005-00-000	Treadle Switch
3	11-10244-00-000	Treadle Switch Support
4	11-10226-00-000	Treadle Support
5	01-11048-05-010	Screw
6	03-11005-05-000	Washer
7	01-11033-04-008	Screw
8	03-11004-04-000	Washer
9	01-11050-05-016	Screw
10	03-21007-06-015	Washer
11	01-11069-06-016	Screw
12	15-90009-00-000	Cable Tube
13	15-90008-00-000	Tube Connector (Bushing)
14	02-11005-05-000	Nut

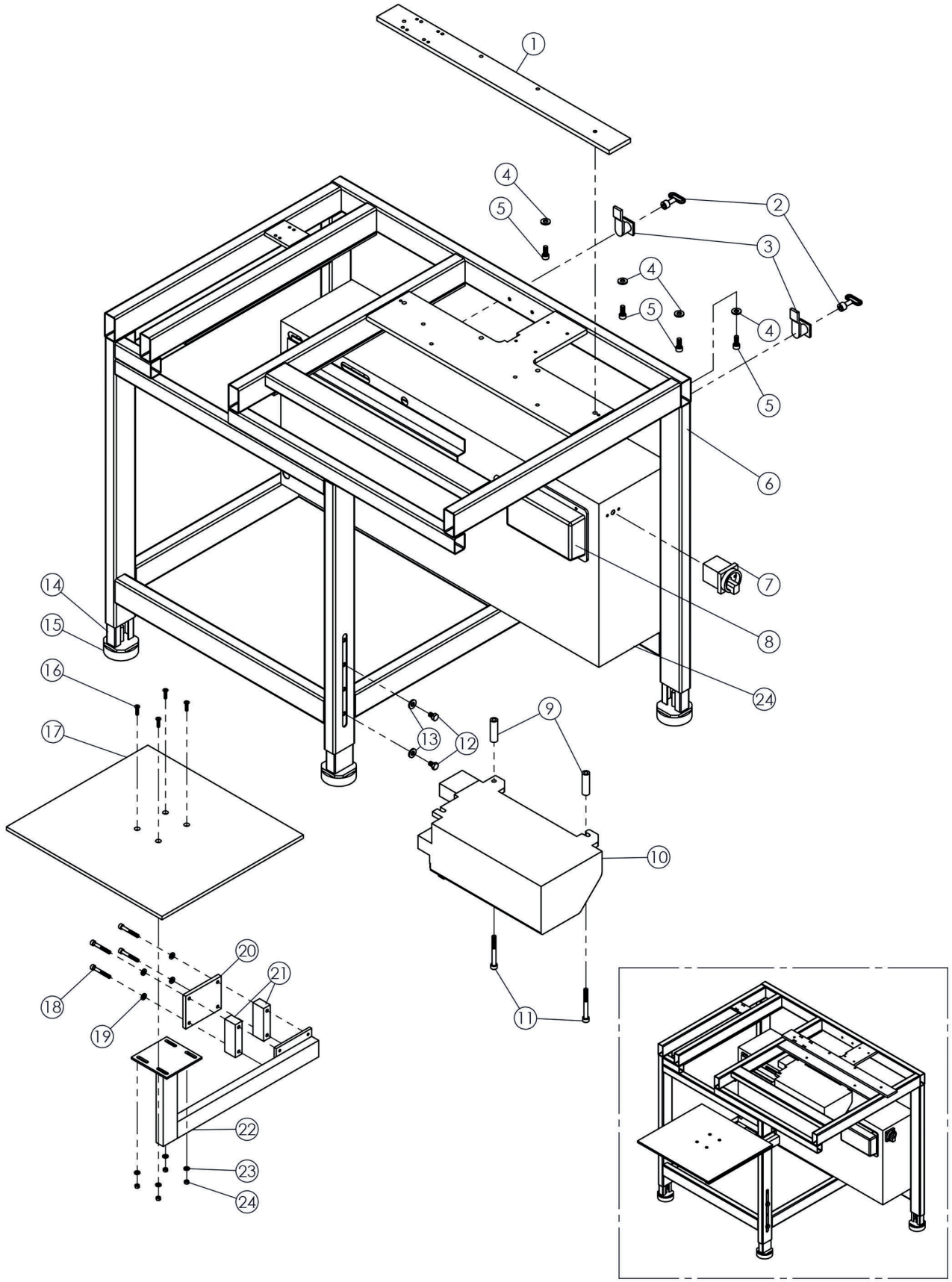
1
4
5
2
3
4
5
4
5
6
7
8
24
14
15
16
17
13
12
9
10
11
18
19
20
21
22
23
24

DET	PART NUMBERT	DESCRIPTION
1	11-10241-00-000	Mounting
2	11-70010-00-000	Key
3	11-70006-00-000	Lock
4	03-11007-08-000	Washer
5	01-11089-08-020	Screw
6	11-70011-00-000	Frame
7	10-30001-00-000	Power Swictch
8	7200-06	Brother S-7200 Power Board
9	11-10141-00-000	Space
10	7200-07	Brother S-7200 Control Box
11	01-11099-08-070	Screw
12	01-81075-08-016	Screw
13	02-11005-50-000	Nut
14	11-70004-00-000	Frame Foot
15	15-90001-00-000	Adjustable Foot
16	01-51029-05-020	Screw
17	15-10006-00-000	Table
18	01-11075-06-045	Screw
19	03-11006-06-000	Washer
20	11-10018-00-000	Plate
21	11-10008-00-000	Space
22	11-10224-00-000	Table Support
23	03-21003-05-015	Washer
24	11-70012-00-003	Board

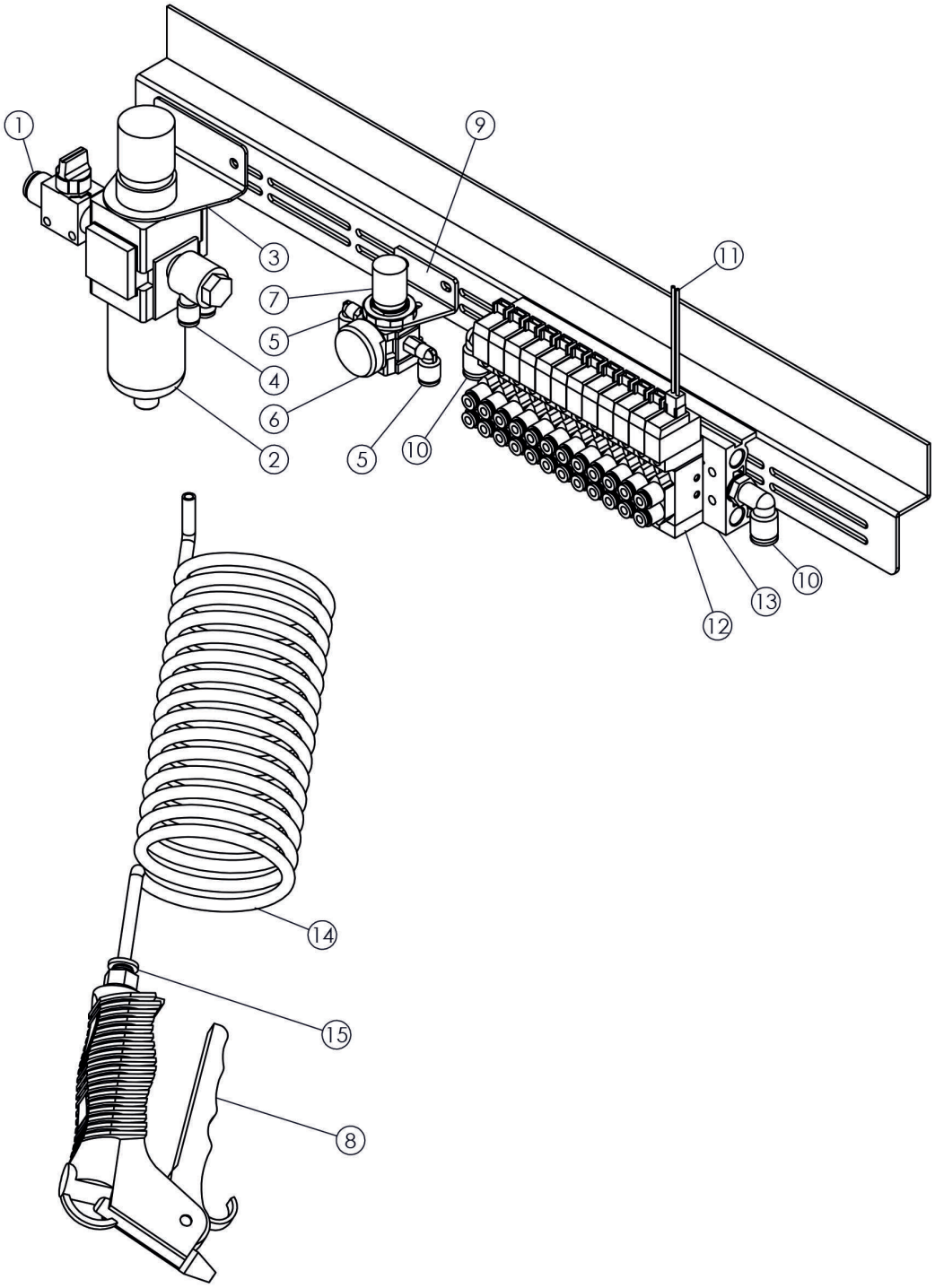
1
9
3
11
7
5
4
6
2
5
10
10
13
12
14
15
8

DET	PART NUMBERT	DESCRIPTION
1	16-60002-14-008	Air Connector Valve
2	16-40012-14-100	Regulator
3	16-70006-00-006	Regulator Holder
4	16-30003-14-306	Joint
5	16-30007-05-206	Elbow Joint
6	16-70008-00-006	Pressure Gauge
7	16-40002-05-100	Regulator
8	16-60003-14-004	Air Gun
9	16-70009-00-006	Regulator Holder
10	16-30005-18-206	Elbow Joint
11	10-20001-00-000	Pneumatic Valve Cable
12	16-20001-00-104	Pneumatic Valve
13	16-70004-05-012	Air Valve Plate
14	16-50002-06-505	Air Gun Tube
15	16-30019-14-106	Joint

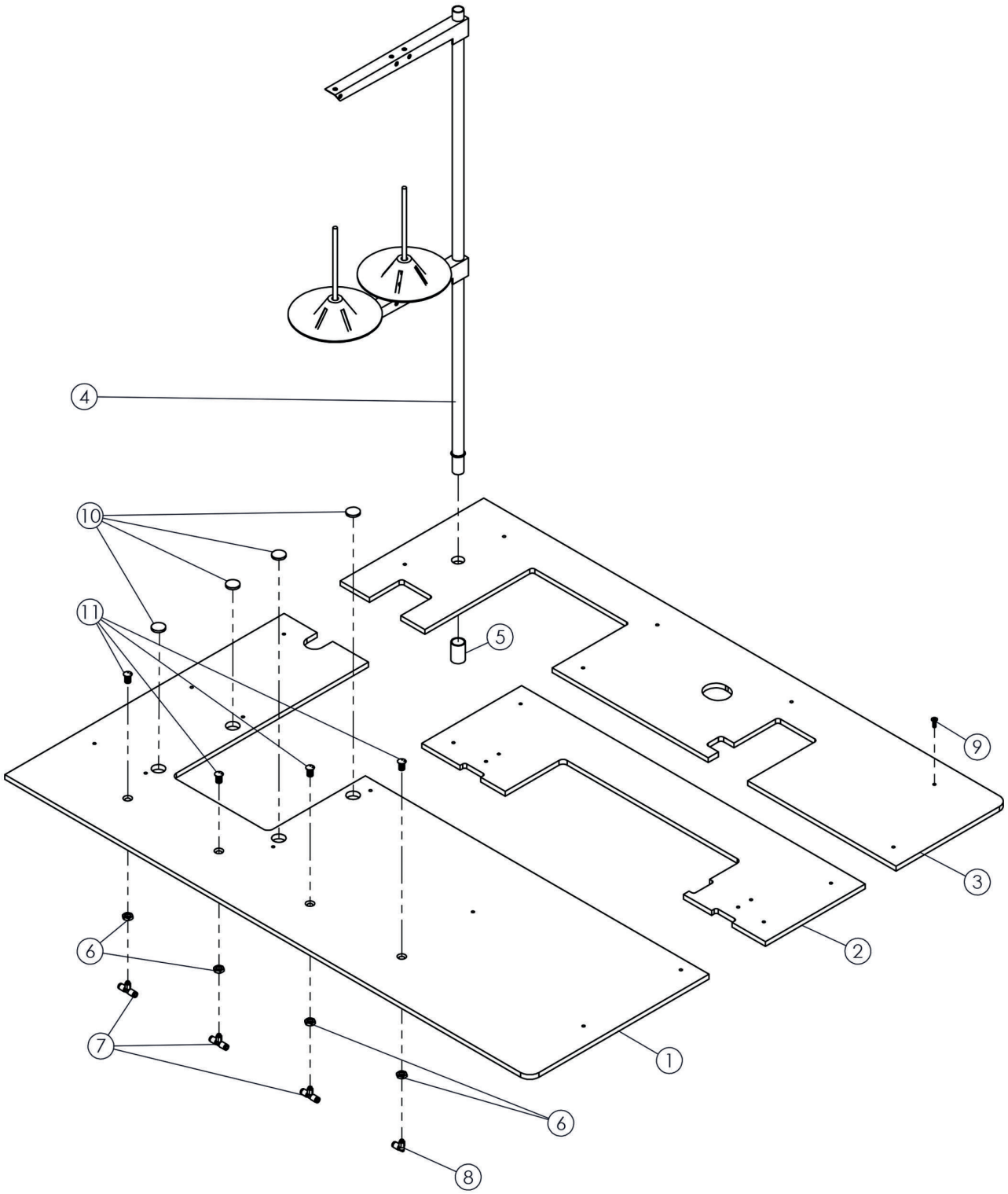
4
10
11
5
9
3
2
6
7
1
6
8

DET	PART NUMBERT	DESCRIPTION
1	15-10001-00-000	Table
2	15-10002-00-000	Table
3	15-10003-00-000	Table
4	21-10001-00-000	Thread Stand Assembly
5	11-10160-00-000	Space Bushing
6	02-91001-08-000	Nut
7	16-30009-05-304	T-Joint
8	16-30006-05-204	Elbow Joint
9	01-61028-04-012	Screw
10	17-50001-00-000	Magnet
11	11-10173-00-000	Air Blowing

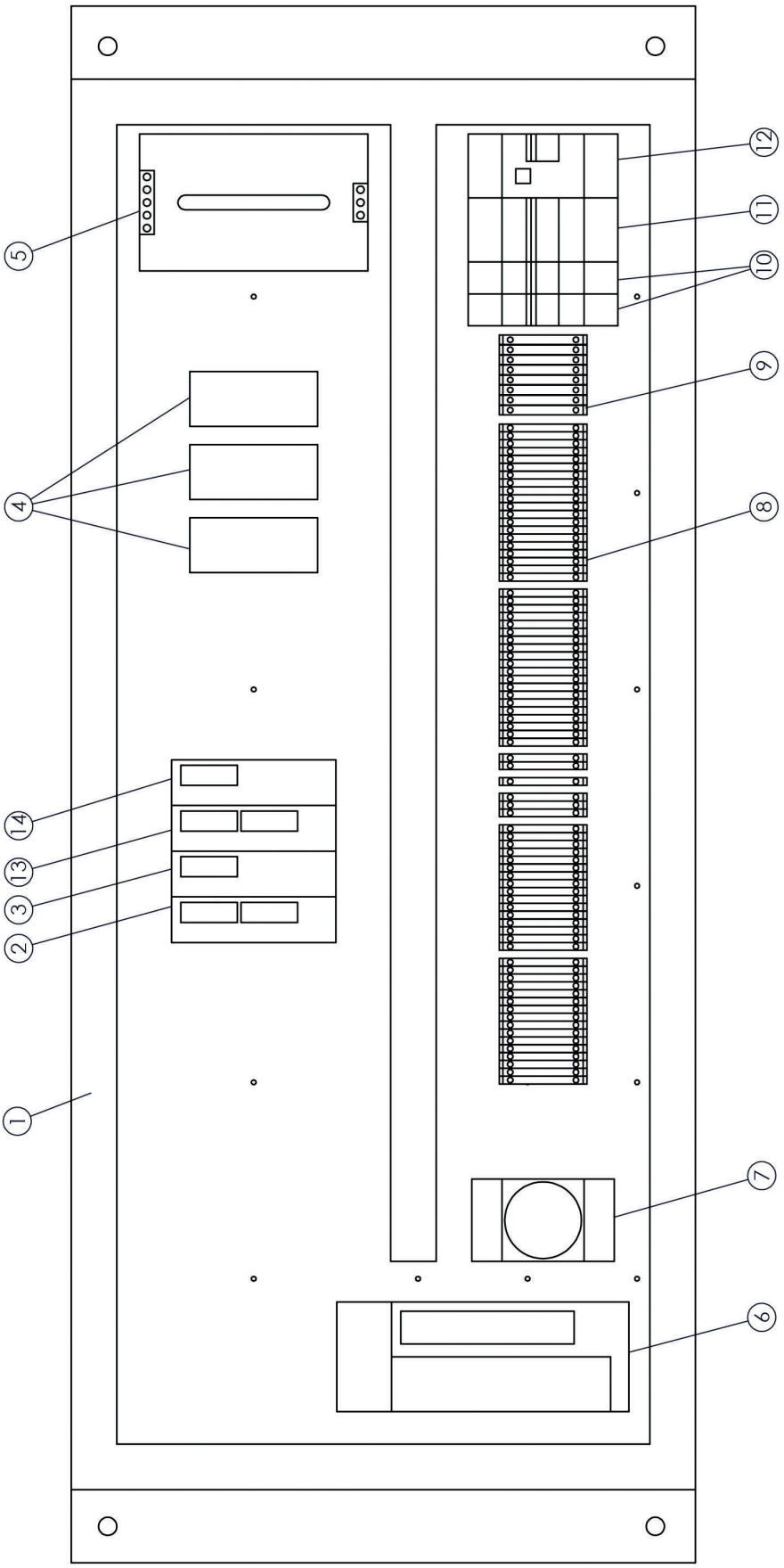
1
2
3
4
5
6
7
8
9
10
11
12
13
14

DET	PART NUMBERT	DESCRIPTION
1	11-10373-00-000	Plate
2	10-40013-00-2101	Plc
3	10-40014-00-000	Analog Card
4	10-30008-00-000	Contact Relay
5	10-30009-00-000	Power
6	10-40018-00-000	Servo Motor Driver 400 W
7	10-30007-00-000	Power Point
8	10-10004-00-000	Terminal
9	10-10005-00-2101	Terminal
10	10-30010-00-000	Fuse
11	10-30011-00-000	Fuse
12	10-30012-00-000	Circuit Breaker Relay
13	10-40015-00-000	I/O Module
14	10-40016-00-000	Out Module

PART NUMBERT	PAGE	DETAIL
01-11015-03-006	02	36
01-11015-03-006	04	26
01-11016-03-008	04	31
01-11016-03-008	06	33
01-11016-03-008	08	22
01-11017-03-010	05	39
01-11018-03-012	01	22
01-11018-03-012	09	28
01-11020-03-016	05	34
01-11020-03-020	02	46
01-11023-03-025	02	33
01-11023-03-025	10	11
01-11033-04-008	07	28
01-11033-04-008	08	20
01-11033-04-008	12	7
01-11034-04-010	03	21
01-11035-04-012	02	39
01-11035-04-012	09	6
01-11036-04-014	01	14
01-11037-04-016	01	10
01-11037-04-016	06	23
01-11037-04-016	07	26
01-11038-04-020	02	43
01-11038-04-020	07	24
01-11041-04-030	05	45
01-11047-05-006	08	16
01-11048-05-008	05	33
01-11048-05-008	06	28
01-11048-05-010	10	14
01-11048-05-010	12	5
01-11049-05-012	06	26
01-11049-05-012	07	23
01-11049-05-012	08	12
01-11049-05-012	09	5
01-11049-05-012	10	44
01-11050-05-016	01	15
01-11050-05-016	03	15
01-11050-05-016	04	34
01-11050-05-016	05	28
01-11050-05-016	06	29
01-11050-05-016	08	13
01-11050-05-016	10	40
01-11050-05-016	12	9
01-11051-05-020	01	11
01-11051-05-020	06	19
01-11051-05-020	07	19

PART NUMBERT	PAGE	DETAIL
01-11051-05-020	08	17
01-11051-05-020	10	30
01-11053-05-025	07	22
01-11054-05-030	07	20
01-11054-05-030	11	15
01-11062-05-070	11	9
01-11067-06-010	09	21
01-11067-06-012	09	16
01-11068-06-012	07	14
01-11068-06-012	10	35
01-11069-06-016	05	40
01-11069-06-016	07	9
01-11069-06-016	08	24
01-11069-06-016	09	11
01-11069-06-016	10	29
01-11069-06-016	12	11
01-11070-06-020	03	13
01-11070-06-020	06	20
01-11070-06-020	11	14
01-11071-06-025	06	21
01-11072-06-030	04	20
01-11073-06-035	06	35
01-11075-06-045	13	18
01-11078-06-060	11	11
01-11088-08-016	10	18
01-11089-08-020	10	38
01-11089-08-020	13	5
01-11090-08-025	04	35
01-11099-08-070	13	11
01-21016-03-008	11	8
01-21024-03-030	11	4
01-31008-04-004	06	31
01-31009-04-006	04	28
01-31009-04-006	05	44
01-31020-05-005	04	25
01-31020-05-006	09	19
01-31021-05-008	02	48
01-31021-05-008	08	15
01-31022-05-010	06	32
01-31037-06-006	03	17
01-31046-06-035	04	22
01-31097-03-016	05	42
01-51014-04-008	02	47
01-51015-04-010	04	32
01-51016-04-012	01	25
01-51016-04-012	05	31

PART NUMBERT	PAGE	DETAIL
01-51018-04-016	05	32
01-51026-05-010	10	3
01-51029-05-020	13	16
01-51038-06-012	10	22
01-61028-04-012	08	27
01-61028-04-012	09	1
01-61028-04-012	15	9
01-81041-05-030	06	36
01-81042-05-035	05	36
01-81075-08-016	13	12
01-82002-10-080	10	25
01-90001-08-030	03	24
02-11003-03-00	10	6
02-11003-03-000	01	23
02-11003-03-000	05	43
02-11003-03-000	11	16
02-11004-04-000	01	18
02-11004-04-000	05	37
02-11005-05-000	01	6
02-11005-05-000	03	10
02-11005-05-000	05	38
02-11005-05-000	06	7
02-11005-05-000	10	33
02-11005-05-000	12	14
02-11005-50-000	13	13
02-11006-06-000	04	24
02-11006-06-000	07	12
02-11008-10-000	10	24
02-21003-05-000	11	5
02-21004-06-000	03	1
02-31003-05-000	08	18
02-31004-06-000	04	23
02-61003-06-000	07	27
02-91001-08-000	15	6
02-91002-08-100	03	23
02-91002-08-100	06	25
02-91002-08-100	09	13
02-91002-08-100	10	15
03-11003-03-000	10	7
03-11003-03-000	02	31
03-11003-03-000	04	27
03-11003-03-000	05	35
03-11003-03-000	06	34
03-11003-03-000	08	23
03-11003-03-000	09	27
03-11003-03-000	11	7

PART NUMBERT	PAGE	DETAIL
03-11004-04-000	03	20
03-11004-04-000	07	25
03-11004-04-000	08	21
03-11004-04-000	09	7
03-11004-04-000	12	8
03-11005-05-000	11	10
03-11005-05-000	01	12
03-11005-05-000	03	16
03-11005-05-000	05	29
03-11005-05-000	07	21
03-11005-05-000	08	14
03-11005-05-000	09	4
03-11005-05-000	10	31
03-11005-05-000	12	6
03-11006-04-000	09	10
03-11006-06-000	03	14
03-11006-06-000	04	21
03-11006-06-000	05	41
03-11006-06-000	06	22
03-11006-06-000	07	15
03-11006-06-000	10	28
03-11006-06-000	11	13
03-11006-06-000	13	19
03-11007-08-000	04	18
03-11007-08-000	10	17
03-11007-08-000	13	4
03-11008-10-000	10	27
03-21002-04-012	01	19
03-21002-04-012	06	24
03-21003-05-015	04	30
03-21003-05-015	06	27
03-21003-05-015	13	23
03-21003-05-015	10	45
03-21007-06-015	03	2
03-21007-06-015	08	25
03-21007-06-015	12	10
03-21017-10-030	10	23
04-10002-04-000	02	27
04-10003-05-000	04	29
04-10004-06-000	05	13
04-10004-06-000	09	24
04-50004-06-000	03	7
04-60010-12-000	04	33
05-20001-00-000	04	11
05-20005-00-000	04	13
07-10007-05-012	02	40

PART NUMBERT	PAGE	DETAIL
07-10007-05-012	04	8
07-10010-10-024	03	3
08-20006-00-000	06	6
08-20007-00-000	06	15
08-50003-00-000	09	18
08-50004-00-000	09	23
09-20003-00-000	06	16
09-60001-10-326	09	20
10-10004-00-000	16	8
10-10005-00-2101	16	9
10-20001-00-000	14	11
10-20002-00-000	10	1
10-30001-00-000	13	7
10-30005-00-000	12	2
10-30007-00-000	16	7
10-30008-00-000	16	4
10-30009-00-000	16	5
10-30010-00-000	16	10
10-30011-00-000	16	11
10-30012-00-000	16	12
10-40004-00-000	09	15
10-40013-00-2101	16	2
10-40014-00-000	16	3
10-40015-00-000	16	13
10-40016-00-000	16	14
10-40018-00-000	16	6
10-40019-00-000	06	14
10-50004-00-000	08	2
10-50006-00-000	10	8
10-50007-00-000	10	2
10-50009-00-000	03	25
10-50009-00-000	06	18
10-50009-00-000	09	14
10-50009-00-000	10	16
10-50011-00-000	09	25
10-70002-00-000	11	1
10-80002-00-000	08	10
11-10003-00-000	06	4
11-10008-00-000	13	21
11-10018-00-000	13	20
11-10053-00-000	10	19
11-10084-00-000	11	6
11-10097-00-000	10	34
11-10098-00-000	05	22
11-10100-00-000	07	7
11-10101-00-000	08	11

PART NUMBERT	PAGE	DETAIL
11-10104-00-000	10	39
11-10105-00-000	02	45
11-10107-00-000	07	3
11-10111-00-000	01	17
11-10113-00-000	08	5
11-10114-00-000	08	6
11-10115-00-000	06	9
11-10116-00-000	06	10
11-10135-00-000	07	1
11-10137-00-000	10	32
11-10138-00-000	03	22
11-10141-00-000	13	9
11-10142-00-000	06	17
11-10143-00-000	02	49
11-10144-00-000	05	15
11-10146-00-000	04	19
11-10147-00-000	05	16
11-10148-00-000	07	17
11-10149-00-000	02	37
11-10150-00-000	02	41
11-10151-00-7200	10	43
11-10152-00-000	06	8
11-10153-00-000	05	17
11-10154-00-000	04	3
11-10155-00-000	05	3
11-10156-00-000	10	41
11-10157-00-000	10	42
11-10159-00-000	06	5
11-10160-00-000	15	5
11-10162-00-000	06	3
11-10163-00-000	03	4
11-10164-00-000	04	17
11-10165-00-000	03	5
11-10166-00-000	07	18
11-10167-00-000	07	2
11-10169-00-000	04	15
11-10170-00-000	11	12
11-10171-00-000	10	36
11-10173-00-000	15	11
11-10174-00-000	07	6
11-10175-00-000	01	1
11-10178-00-000	07	4
11-10179-00-000	03	18
11-10180-00-000	02	38
11-10181-00-000	03	12
11-10182-00-000	06	11

PART NUMBERT	PAGE	DETAIL
11-10185-00-000	01	24
11-10186-00-000	02	35
11-10186-00-000	04	7
11-10188-00-000	05	19
11-10189-00-000	05	8
11-10191-00-000	02	44
11-10193-00-000	10	10
11-10194-00-000	05	24
11-10196-00-000	03	8
11-10199-00-000	09	22
11-10204-00-000	05	12
11-10206-00-000	04	2
11-10208-00-000	05	4
11-10209-00-000	08	1
11-10210-00-000	11	3
11-10211-00-000	03	26
11-10212-00-000	04	6
11-10213-00-000	09	8
11-10214-00-000	05	5
11-10215-00-000	04	4
11-10216-00-000	04	14
11-10218-00-000	07	11
11-10219-00-000	05	6
11-10222-00-000	03	19
11-10223-00-000	06	2
11-10224-00-000	13	22
11-10225-00-000	12	1
11-10226-00-000	12	4
11-10227-00-000	10	20
11-10228-00-000	07	16
11-10230-00-000	04	1
11-10231-00-000	04	16
11-10233-00-000	04	10
11-10234-00-000	04	12
11-10235-00-000	05	10
11-10237-00-000	04	9
11-10238-00-000	10	26
11-10239-00-000	06	12
11-10241-00-000	13	1
11-10244-00-000	12	3
11-10246-00-003	10	12
11-10253-00-000	10	13
11-10260-00-000	11	17
11-10340-00-000	08	7
11-10341-00-000	08	8
11-10342-00-000	08	28

PART NUMBERT	PAGE	DETAIL
11-10343-00-000	01	13
11-10344-00-000	08	26
11-10345-00-000	01	16
11-10347-00-000	01	21
11-10348-00-000	05	7
11-10349-00-000	09	26
11-10350-00-000	09	12
11-10351-00-000	02	32
11-10352-00-002	01	20
11-10353-00-002	02	34
11-10355-00-000	09	3
11-10357-00-000	02	51
11-10358-00-000	01	9
11-10359-00-000	02	42
11-10360-00-005	05	21
11-10361-00-000	06	13
11-10362-00-000	05	20
11-10364-00-000	10	5
11-10365-00-000	11	12
11-10373-00-000	16	1
11-10374-00-000	02	29
11-10375-00-000	10	9
11-10824-00-000	06	30
11-40007-00-000	11	2
11-70004-00-000	13	14
11-70006-00-000	13	3
11-70010-00-000	13	2
11-70011-00-000	13	6
11-70012-00-003	13	24
13-20001-00-000	04	5
13-20004-00-000	10	37
13-30010-00-000	01	26
13-30010-00-000	05	11
14-50002-00-000	01	5
14-60001-00-000	10	4
15-10001-00-000	15	1
15-10002-00-000	15	2
15-10003-00-000	15	3
15-10004-00-000	08	29
15-10005-00-000	09	2
15-10006-00-000	13	17
15-60005-00-000	05	18
15-60007-00-002	05	27
15-80002-00-000	07	5
15-90001-00-000	13	15
15-90003-00-000	10	21

PART NUMBERT	PAGE	DETAIL
15-90005-00-000	05	14
15-90006-00-000	05	23
15-90007-00-000	05	46
15-90008-00-000	12	13
15-90009-00-000	12	12
16-10005-00-100	01	4
16-10011-00-100	02	28
16-10012-00-200	02	50
16-10014-00-200	01	8
16-10018-00-200	05	26
16-10027-00-200	07	8
16-10032-00-600	07	13
16-10032-00-600	08	9
16-10034-00-100	03	9
16-10034-00-100	05	25
16-20001-00-104	14	12
16-30003-14-306	14	4
16-30005-18-206	14	10
16-30006-05-204	01	7
16-30006-05-204	07	10
16-30006-05-204	15	8
16-30007-05-206	14	5
16-30009-05-304	15	7
16-30010-00-404	01	2
16-30019-14-106	14	15
16-40002-05-100	14	7
16-40007-05-404	01	3

PART NUMBERT	PAGE	DETAIL
16-40007-05-404	03	6
16-40007-05-404	05	30
16-40007-05-404	08	19
16-40009-05-404	07	29
16-40012-14-100	14	2
16-50002-06-505	14	14
16-60002-14-008	14	1
16-60003-14-004	14	8
16-70004-05-012	14	13
16-70006-00-006	14	3
16-70008-00-006	14	6
16-70009-00-006	14	9
17-10003-05-000	03	11
17-10006-04-000	02	30
17-50001-00-000	15	10
20-10005-00-000	06	1
20-10006-00-000	05	2
20-10008-00-000	09	17
20-10009-00-000	08	3
20-20003-00-000	05	9
20-20003-00-000	09	9
20-20004-00-000	05	1
20-20003-00-000	08	4
21-10001-00-000	15	4
7200-06	13	8
7200-07	13	10

FTECH

Dikiş Otomat Sistemleri

Orta Mah/ Maltepe Cad. Emintaş Akel İş Merkezi No:10/224 Bayrampaşa / İSTANBUL - TÜRKİYE
Tel:+90 212 505 98 91 / 92 - Faks: +90 212 505 98 93 - İnfo@untasmakina.com