FTECH

Dikiş Otomat Sistemleri

MODEL FT-7100

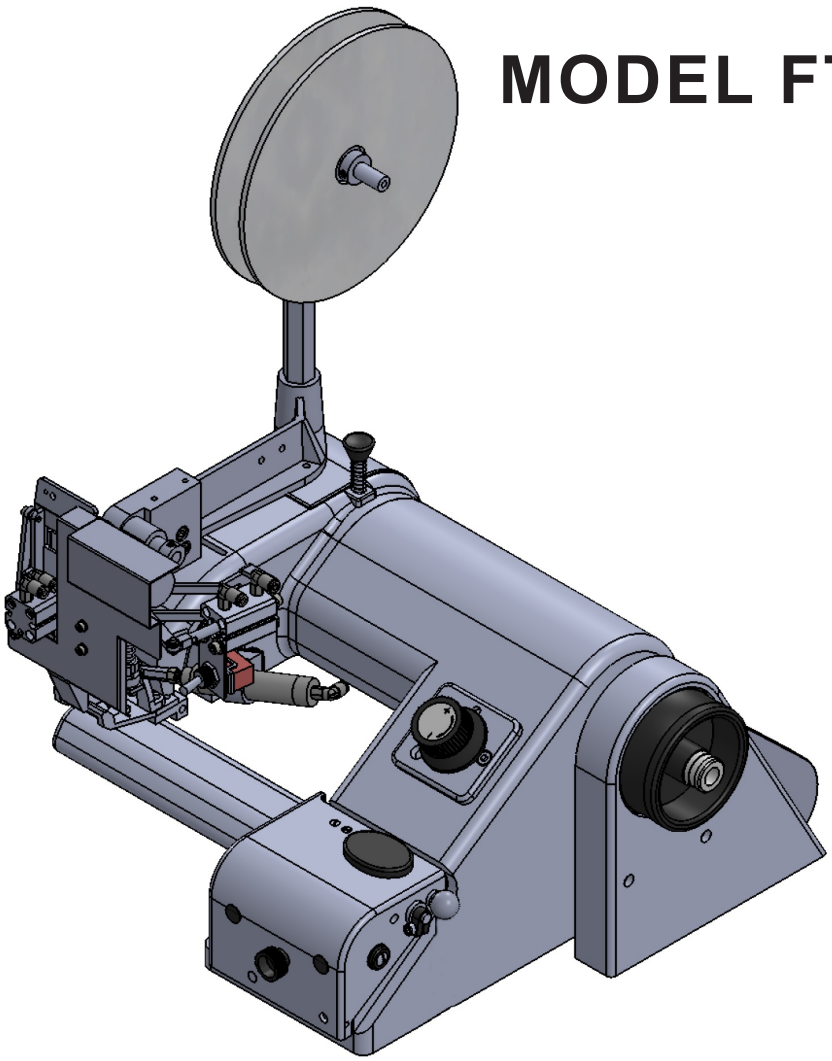

BLIND STITCH SEWING FOR FUSIBLE COATED TAPE

PARTS MANUAL

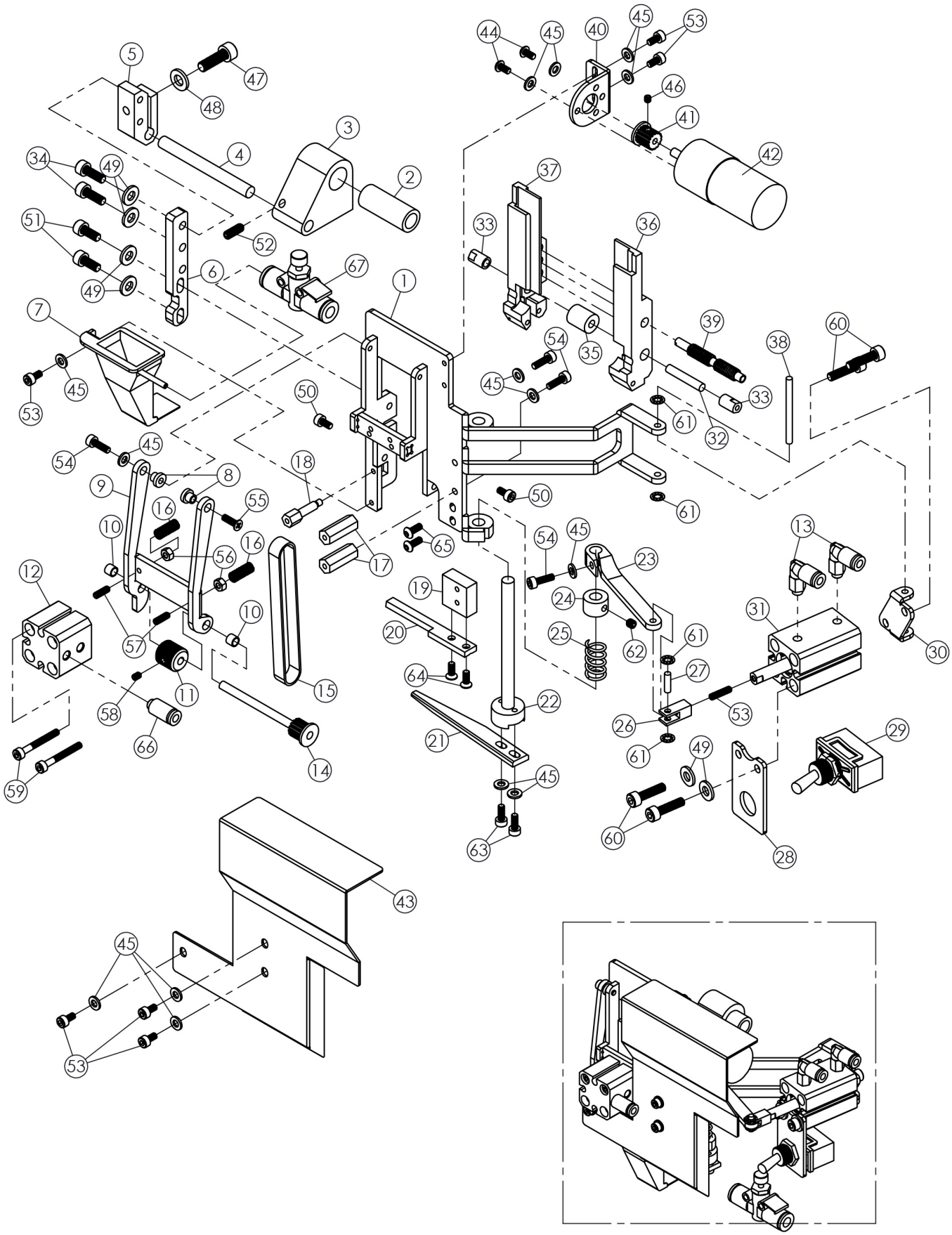

DET	PART NUMBERT	DESCRIPTION
1	11-10591-00-002	Frame
2	11-10583-00-000	Bushing
3	11-10582-00-000	Mount Block
4	11-10581-00-000	Shaft
5	11-10580-00-000	Mount Block
6	11-10579-00-000	Support Plate
7	11-10645-00-000	Tape Guide
8	11-10606-00-000	Bushing
9	11-10593-00-000	Lever
10	14-40003-00-000	Bushing
11	11-10600-00-000	Puller
12	16-10039-00-200	Cylinder
13	16-30006-05-204	Elbow Joint
14	11-10610-00-001	Pulley
15	09-60004-07-090	Belt
16	05-20010-00-000	Spring
17	11-10597-00-000	Specer
18	11-10605-00-000	Specer
19	11-10578-00-000	Knife Holder
20	11-10577-00-000	Fixed Knife
21	11-10576-00-000	Knife
22	11-10575-00-002	Knife Holder
23	11-10608-00-000	Lever
24	11-10573-00-000	Coller
25	05-20012-00-000	Spring
26	11-10570-00-000	Y - Knuck
27	11-10571-00-000	Pin
28	11-10609-00-000	Switch Holder
29	10-30007-00-000	Switch
30	11-10572-00-000	Cylinder Support
31	16-10041-00-200	Cylinder
32	11-10602-00-000	Shaft
33	11-10564-00-000	Shoulder Nut
34	01-11035-04-012	Screw

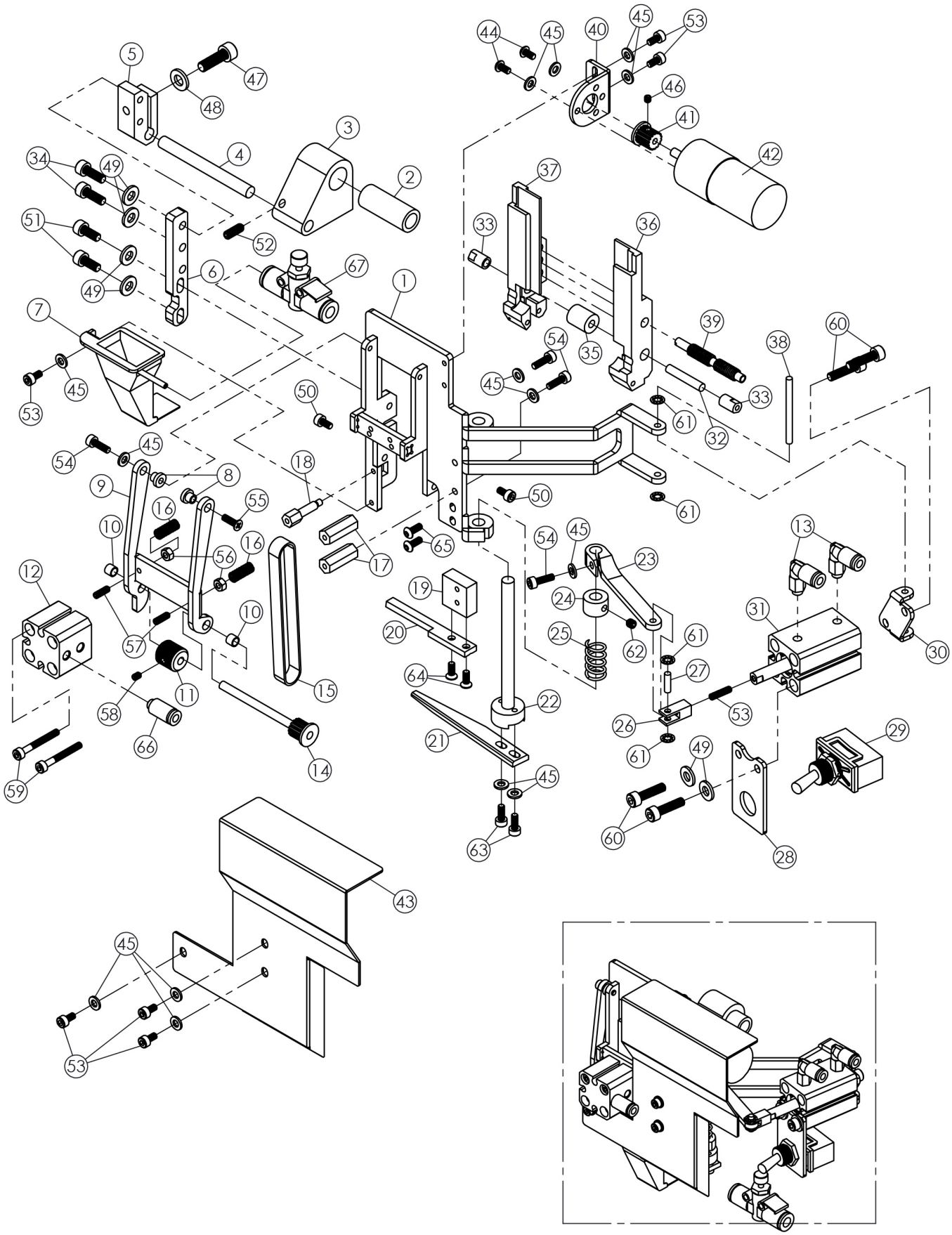

DET	PART NUMBERT	DESCRIPTION
35	11-10601-00-000	Puller
36	11-10595-00-000	Mount Block
37	11-10596-00-000	Mount Block
38	11-10629-00-000	Pin
39	11-10598-00-000	Adjusing Screw
40	11-10607-00-000	Motor Support
41	08-80003-00-000	Pulley
42	10-40009-00-000	DC Motor
43	11-10592-00-000	Cover
44	01-41003-03-006	Screw
45	03-11003-03-000	Washer
46	01-31001-03-003	Screw
47	01-11050-05-016	Screw
48	03-11005-05-000	Washer
49	03-11004-04-000	Washer
50	01-11015-03-006	Screw
51	01-11034-04-010	Screw
52	01-31012-04-012	Screw
53	01-11045-03-006	Screw
54	01-11017-03-010	Screw
55	01-51005-03-010	Screw
56	02-11003-03-000	Nut
57	01-31006-03-010	Screw
58	01-31003-03-005	Screw
59	01-11023-03-025	Screw
60	01-11037-04-016	Screw
61	04-50001-03-000	Retainer
62	01-31008-04-005	Screw
63	01-11016-03-008	Screw
64	01-51004-03-008	Screw
65	01-41004-03-008	Screw
66	16-30012-05-104	Joint
67	16-40009-00-304	Speed Controller

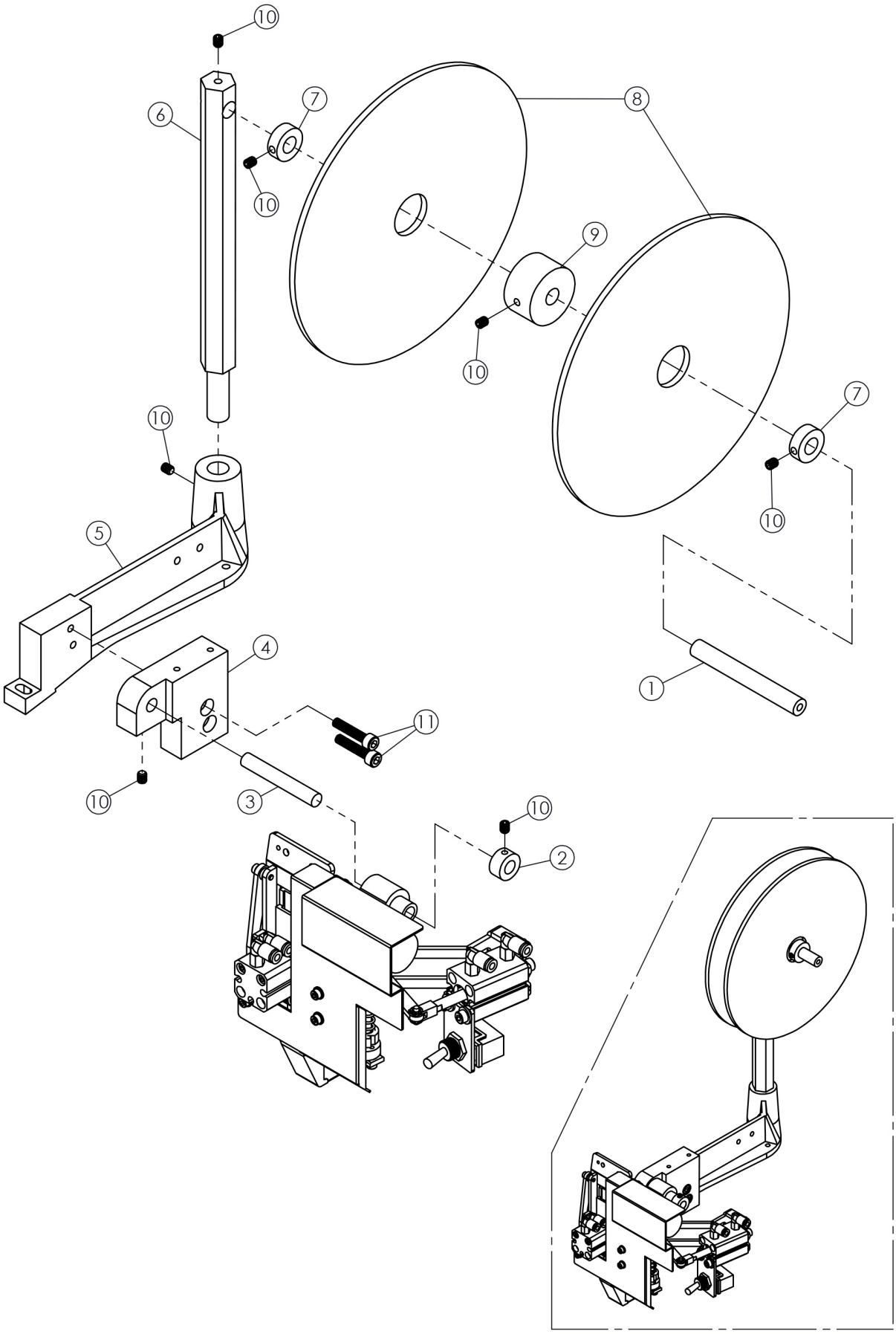
10
6
7
8
10
9
10
7
10
10
5
4
1
11
10
3
10
2

DET	PART NUMBERT	DESCRIPTION
1	11-10588-00-000	Shaft
2	11-10584-00-000	Coller
3	11-10585-00-000	Shaft
4	11-10586-00-000	Mount Block
5	11-10628-00-000	Mount Block
6	11-10587-00-000	Tape Support
7	11-10463-00-000	Coller
8	15-30005-00-000	Tape Cover
9	11-10589-00-000	Coller
10	01-31020-05-006	Screw
11	01-11053-05-025	Screw

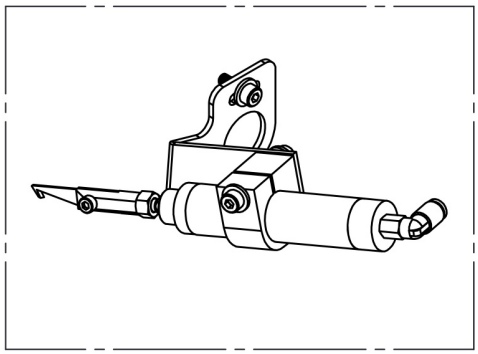

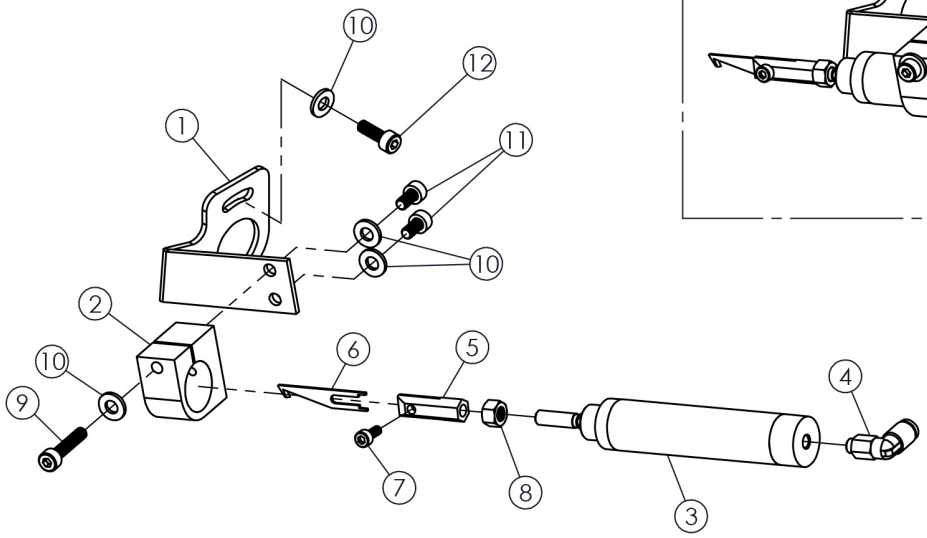
10
12
1
11
10
2
10
9
6
5
4
7
8
3

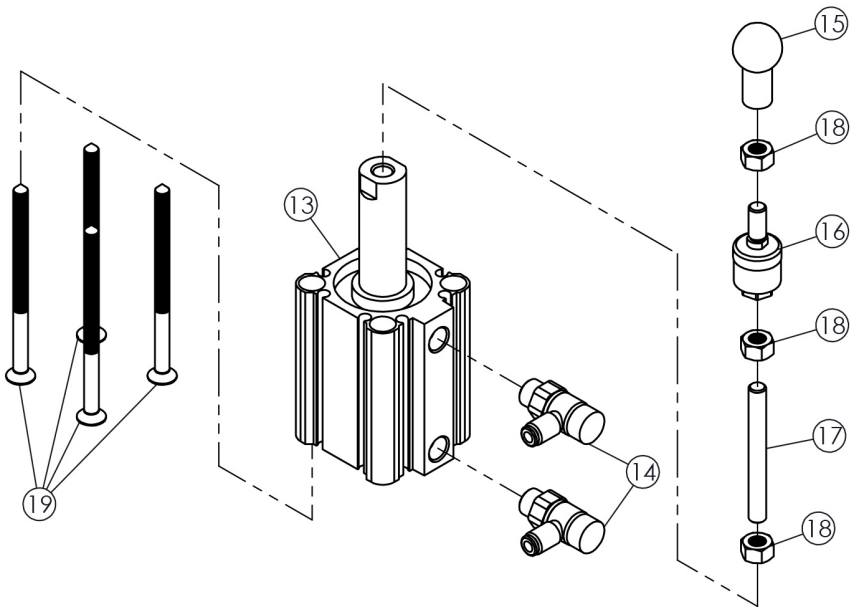
15
18
16
18
17
18
13
14
19

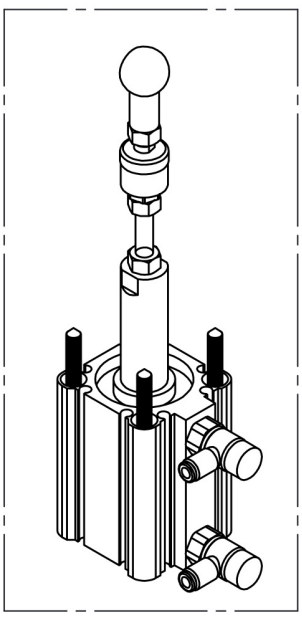

DET	PART NUMBERT	DESCRIPTION
1	11-10042-01-000	Cylinder Support
2	11-10695-00-000	Cylinder Support
3	16-10008-00-001	Cylinder
4	16-30006-05-204	Elbow Joint
5	11-10040-00-000	Knife Holder
6	11-10039-00-000	Knife
7	01-11016-03-008	Screw
8	02-11005-05-000	Nut
9	01-11038-04-020	Screw
10	03-11004-04-000	Washer
11	01-11033-04-008	Screw
12	01-11035-04-012	Screw
13	16-10040-00-200	Cylinder
14	16-40004-18-404	Speed Controller
15	17-10009-00-000	Rod End
16	17-10011-06-000	Universal Joint
17	01-82003-06-080	Screw
18	02-11006-06-000	Nut
19	01-21064-05-080	Screw

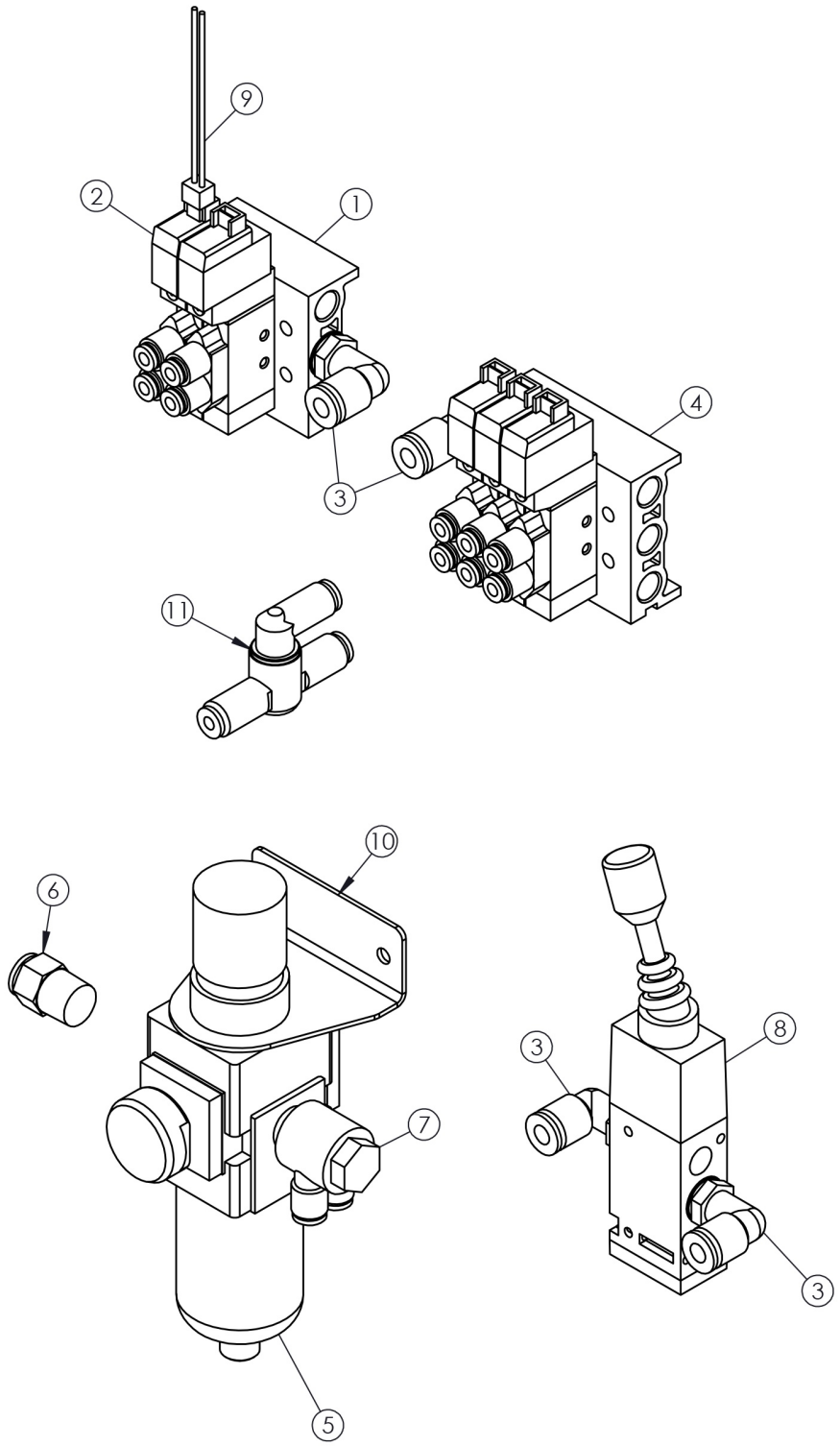
9
2
1
4
3
11
10
6
7
5
8
3
3

DET	PART NUMBERT	DESCRIPTION
1	16-70019-05-002	Air Valve Plate
2	16-20001-00-104	Pneumatic Valve
3	16-30005-18-206	Elbow Joint
4	16-70003-05-303	Air Valve Plate
5	16-40012-14-100	Regulator
6	16-30030-14-108	Air Connector Valve
7	16-30003-14-200	Joint
8	16-20004-18-200	Pneumatic Valve
9	10-20001-00-000	Valve Cable
10	16-70006-00-006	Regulator Holder
11	16-20005-04-500	Valve

PART NUMBERT	PAGE	DETAIL
01-11015-03-006	02	50
01-11016-03-008	02	63
01-11016-03-008	04	7
01-11017-03-010	02	54
01-11023-03-025	02	59
01-11033-04-008	04	11
01-11034-04-010	02	51
01-11035-04-012	01	34
01-11035-04-012	04	12
01-11037-04-016	02	60
01-11038-04-020	04	9
01-11045-03-006	02	53
01-11050-05-016	02	47
01-11053-05-025	03	11
01-21064-05-080	04	19
01-31001-03-003	02	46
01-31003-03-005	02	58
01-31006-03-010	02	57
01-31008-04-005	02	62
01-31012-04-012	02	52
01-31020-05-006	03	10
01-41003-03-006	02	44
01-41004-03-008	02	65
01-51004-03-008	02	64
01-51005-03-010	02	55
01-82003-06-080	04	17
02-11003-03-000	02	56
02-11005-05-000	04	8
02-11006-06-000	04	18
03-11003-03-000	02	45

PART NUMBERT	PAGE	DETAIL
03-11004-04-000	02	49
03-11004-04-000	04	10
03-11005-05-000	02	48
04-50001-03-000	02	61
05-20010-00-000	01	16
05-20012-00-000	01	25
08-80003-00-000	02	41
09-60004-07-090	01	15
10-20001-00-000	05	9
10-30007-00-000	01	29
10-40009-00-000	02	42
11-10039-00-000	04	6
11-10040-00-000	04	5
11-10042-01-000	04	1
11-10463-00-000	03	7
11-10564-00-000	01	33
11-10570-00-000	01	26
11-10571-00-000	01	27
11-10572-00-000	01	30
11-10573-00-000	01	24
11-10575-00-002	01	22
11-10576-00-000	01	21
11-10577-00-000	01	20
11-10578-00-000	01	19
11-10579-00-000	01	6
11-10580-00-000	01	5
11-10581-00-000	01	4
11-10582-00-000	01	3
11-10583-00-000	01	2
11-10584-00-000	03	2

PART NUMBERT	PAGE	DETAIL
11-10585-00-000	03	3
11-10586-00-000	03	4
11-10587-00-000	03	6
11-10588-00-000	03	1
11-10589-00-000	03	9
11-10591-00-002	01	1
11-10592-00-000	02	43
11-10593-00-000	01	9
11-10595-00-000	02	36
11-10596-00-000	02	37
11-10597-00-000	01	17
11-10598-00-000	02	39
11-10600-00-000	01	11
11-10601-00-000	02	35
11-10602-00-000	01	32
11-10605-00-000	01	18
11-10606-00-000	01	8
11-10607-00-000	02	40
11-10608-00-000	01	23
11-10609-00-000	01	28
11-10610-00-001	01	14
11-10628-00-000	03	5
11-10629-00-000	02	38
11-10645-00-000	01	7
11-10695-00-000	04	2
14-40003-00-000	01	10
15-30005-00-000	03	8
16-10008-00-001	04	3
16-10039-00-001	01	12
16-10040-00-200	04	13

PART NUMBERT	PAGE	DETAIL
16-10041-00-200	01	31
16-20001-00-104	05	2
16-20004-18-200	05	8
16-20005-04-500	05	11
16-30003-14-200	05	7
16-30005-18-206	05	3
16-30006-05-204	01	13
16-30006-05-204	04	4
16-30012-05-104	02	66
16-30030-14-108	05	6
16-40004-18-404	04	14
16-40009-00-304	02	67
16-40012-14-100	05	5
16-70003-05-303	05	4
16-70006-00-006	05	10
16-70019-05-002	05	1
17-10009-00-000	04	15
17-10011-06-000	04	16

FTECH

Dikiş Otomat Sistemleri

Orta Mah/ Maltepe Cad. Emintaş Akel İş Merkezi No:10/142 Bayrampaşa / İSTANBUL - TÜRKİYE
Tel:+90 212 505 98 91 / 92 - Faks: +90 212 505 98 93 - İnfo@untasmakina.com