FTECH

Dikiş Otomat Sistemleri

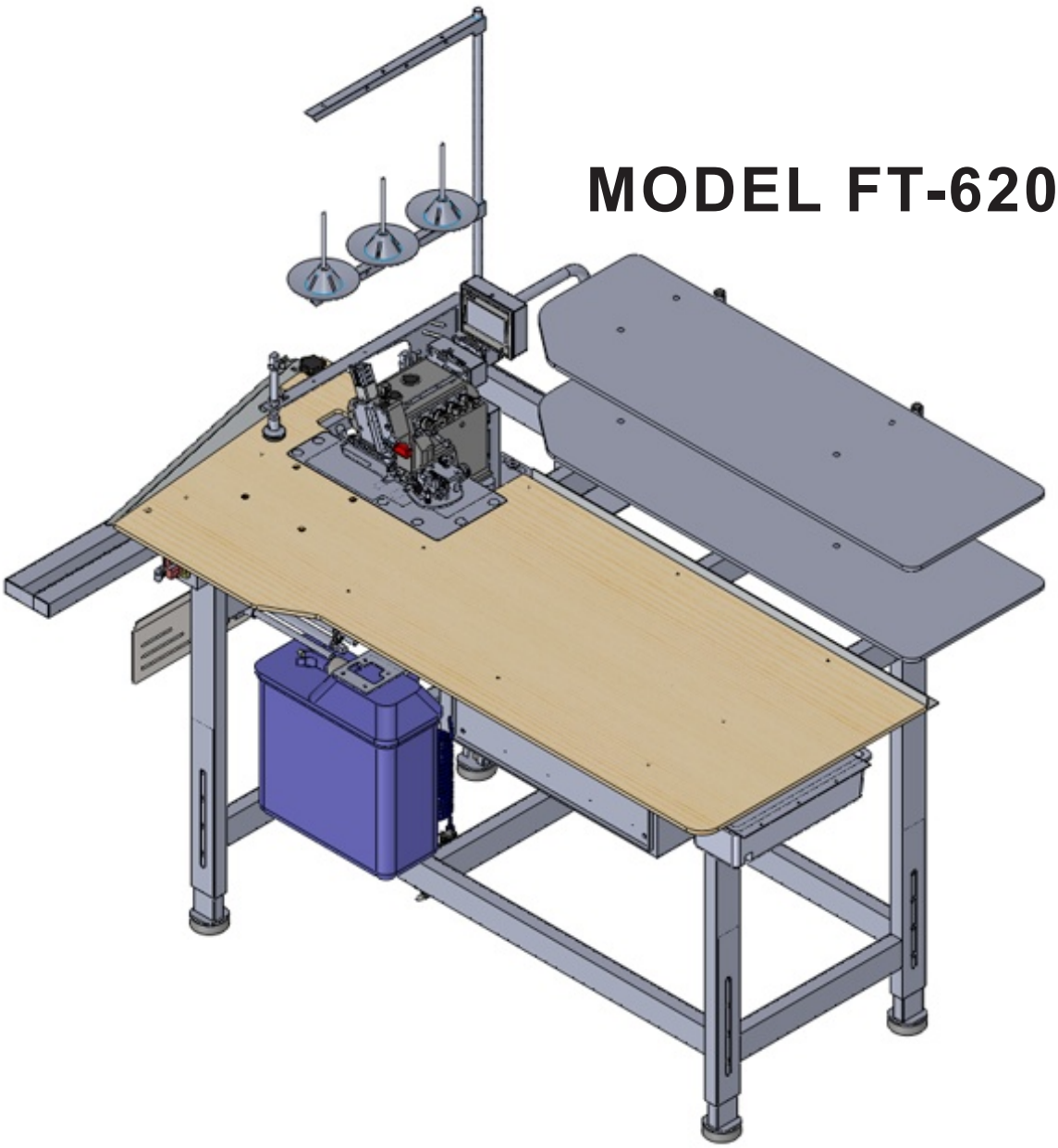

MODEL FT-6200

SINGLE HEAD SERGING UNIT FOR TROUSERS WITH OR WITHOUT KNEE LINING

PARTS MANUAL

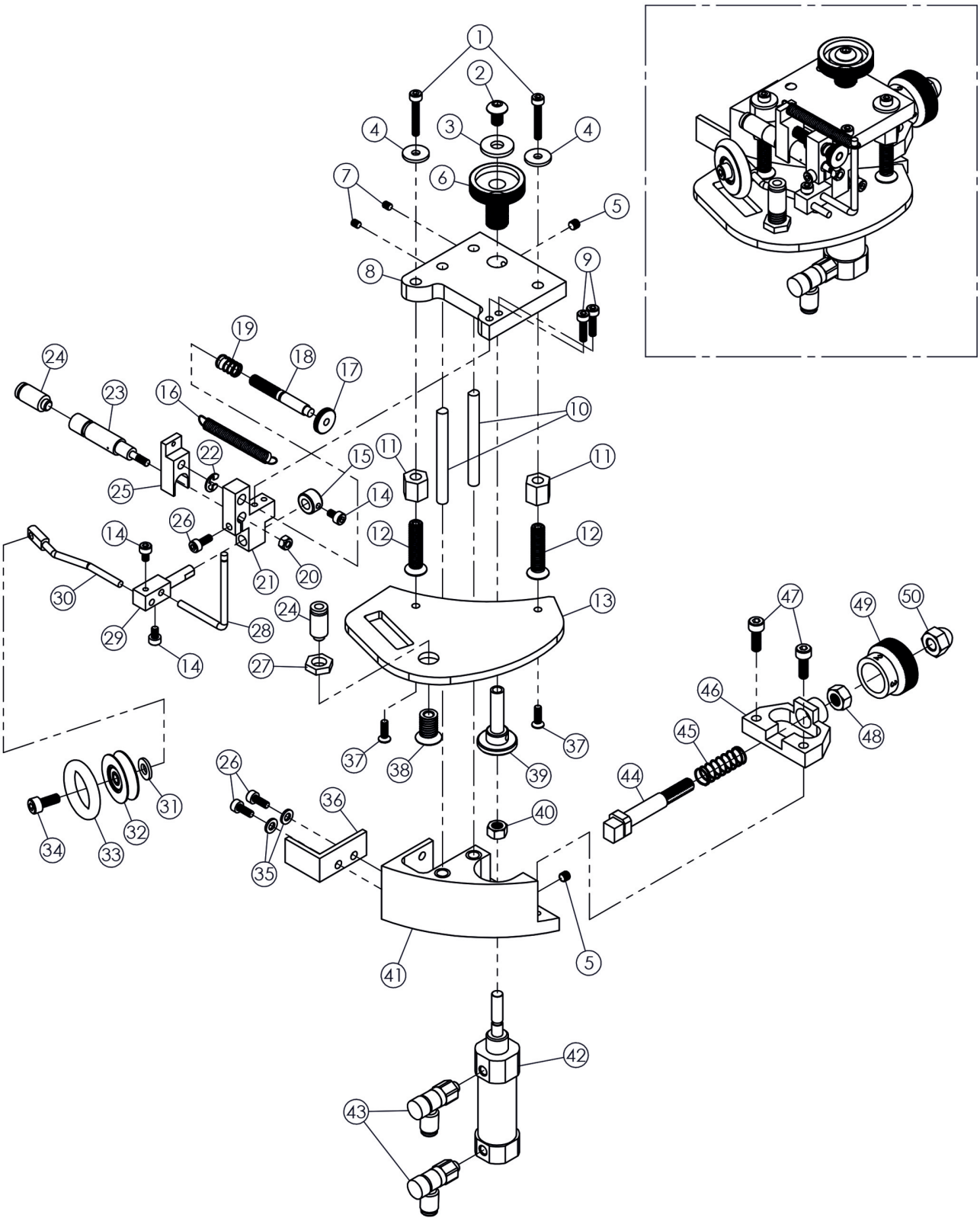
1
2
3
4
4
5
6
7
8
9
10
11
11
12
12
13
14
14
14
15
16
17
18
19
20
21
22
23
24
24
25
26
26
27
28
29
30
31
32
33
34
35
36
37
37
38
39
40
41
42
43
44
45
46
47
48
49
50

DET	PART NUMBERT	DESCRIPTION
1	01-11021-03-020	Screw
2	01-41022-05-010	Screw
3	03-11005-05-000	Washer
4	03-21001-03-000	Washer
5	01-31008-04-004	Screw
6	11-10337-00-000	Adjustment Button
7	01-31002-03-004	Screw
8	11-10384-00-000	Plate
9	01-11018-03-012	Screw
10	13-20001-00-000	Shaft
11	02-51001-06-000	Nut
12	01-51041-06-025	Screw
13	15-30001-00-000	Guide Plate
14	01-11014-03-005	Screw
15	11-10186-00-000	Coller
16	05-10001-00-000	Spring
17	11-10334-00-000	Adjustment Button
18	11-10333-00-000	Shaft
19	05-10001-00-000	Spring
20	02-21001-03-000	Nut
21	11-10329-00-000	Block
22	04-20003-05-000	Retainer
23	16-10029-00-100	Cylinder
24	16-30012-05-104	Joint
25	11-10106-00-000	Cylinder Holder

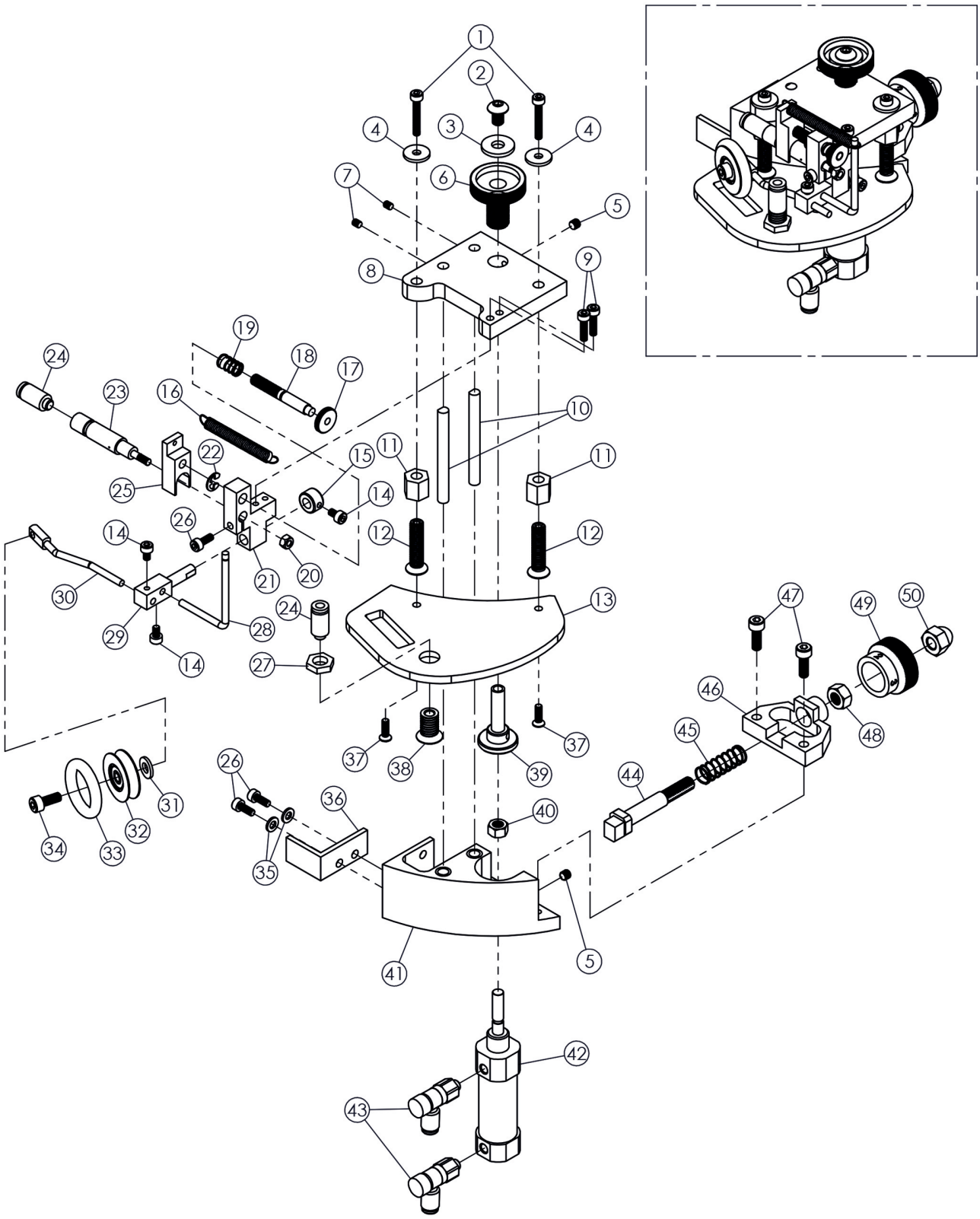

DET	PART NUMBERT	DESCRIPTION
26	01-11016-03-008	Screw
27	02-91001-08-000	Nut
28	11-10331-00-000	Spring Holder
29	11-10192-00-000	Mounting Block
30	13-30006-00-000	Shaft
31	03-11004-04-000	Washer
32	11-10383-00-002	Guide Wheel
33	06-10001-18-028	O Ring
34	01-11034-04-010	Screw
35	03-11003-03-000	Washer
36	11-10335-00-000	Guide
37	01-51005-03-010	Screw
38	11-10173-00-000	Air Blowing
39	11-10328-00-000	Shaft
40	02-11005-05-000	Nut
41	11-10381-00-005	Guide Holder
42	16-10028-00-100	Cylinder
43	16-40008-05-404	Speed Controller
44	11-10330-00-000	Distance Shaft
45	05-20005-00-000	Spring
46	11-10332-00-000	Block
47	01-11018-04-012	Screw
48	02-11006-06-000	Nut
49	11-10327-00-000	Distance Button
50	16-30012-05-104	Nut

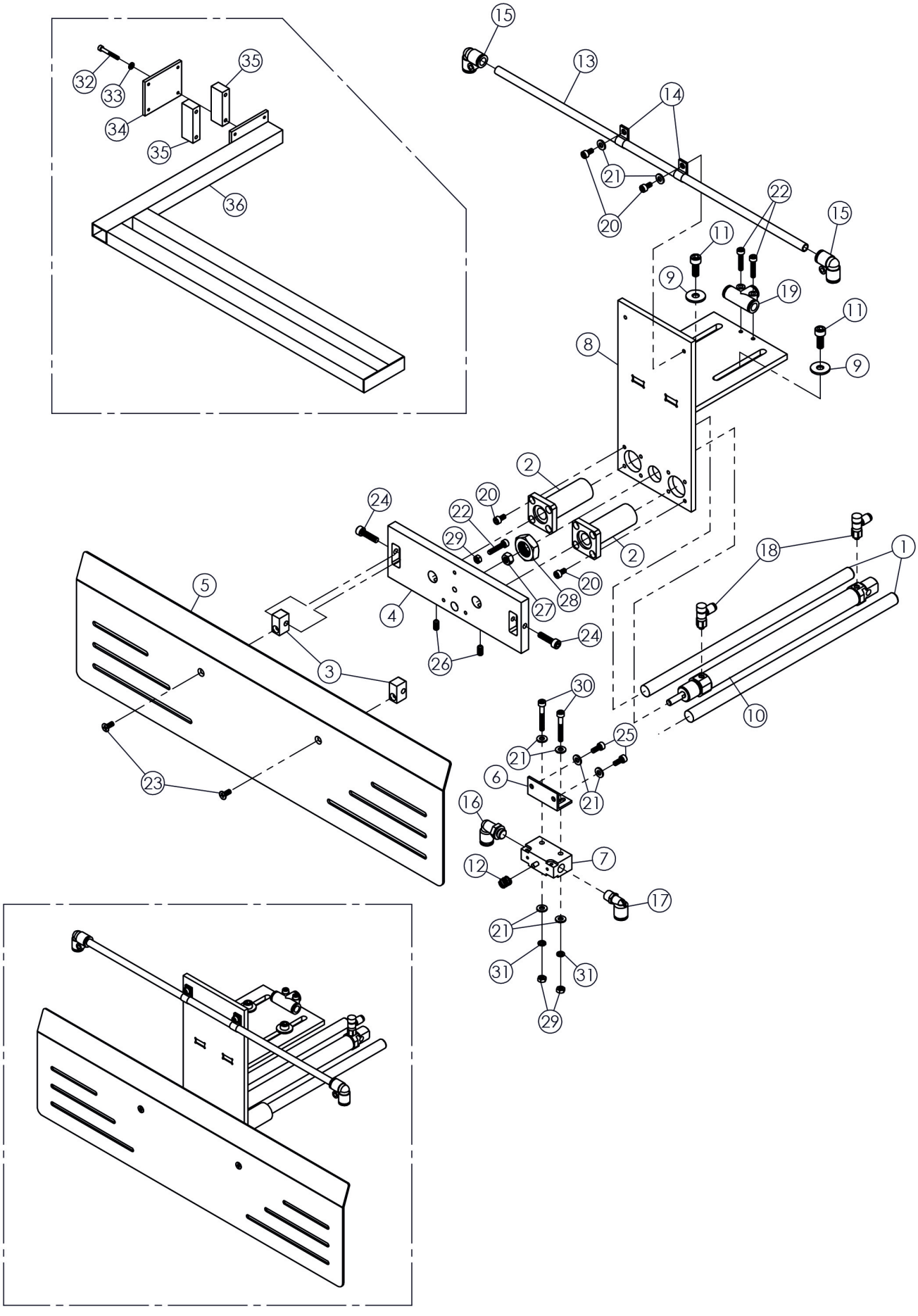
15
13
14
21
20
22
15
11
9
19
11
9
8
2
20
24
22
29
2
18
1
5
4
27
28
20
24
26
3
10
30
21
25
6
21
16
12
7
17
21
31
31
29
23
32
33
34
35
35
36

DET	PART NUMBERT	DESCRIPTION
1	11-10136-00-000	Shaft
2	07-40003-12-022	Bearing
3	11-10323-00-000	R Support
4	11-10382-00-000	Plate
5	11-10336-00-000	Plate
6	11-10211-00-000	Cylinder Support
7	16-20003-18-200	Valve
8	11-10016-00-002	Support
9	03-21007-06-015	Washer
10	16-10017-00-100	Cylinder
11	01-11069-06-016	Screw
12	05-20004-00-000	Spring
13	11-10339-00-000	Air Blowing
14	15-60008-00-000	Cort Clamp
15	16-30018-00-608	Elbow
16	16-30005-18-206	Elbow Joint
17	16-30011-18-208	Elbow Joint
18	16-40004-18-404	Speed Controller
19	16-30013-00-058	T Joint
20	01-11033-04-008	Screw
21	03-11004-04-000	Washer
22	01-11038-04-020	Screw
23	01-61027-04-010	Screw
24	01-11051-05-020	Screw
25	01-11034-04-010	Screw
26	01-31022-04-010	Screw
27	02-11006-06-000	Nut
28	02-91007-16-150	Nut
29	02-11004-04-000	Nut
30	01-11041-04-030	Screw
31	03-31003-03-000	Washer

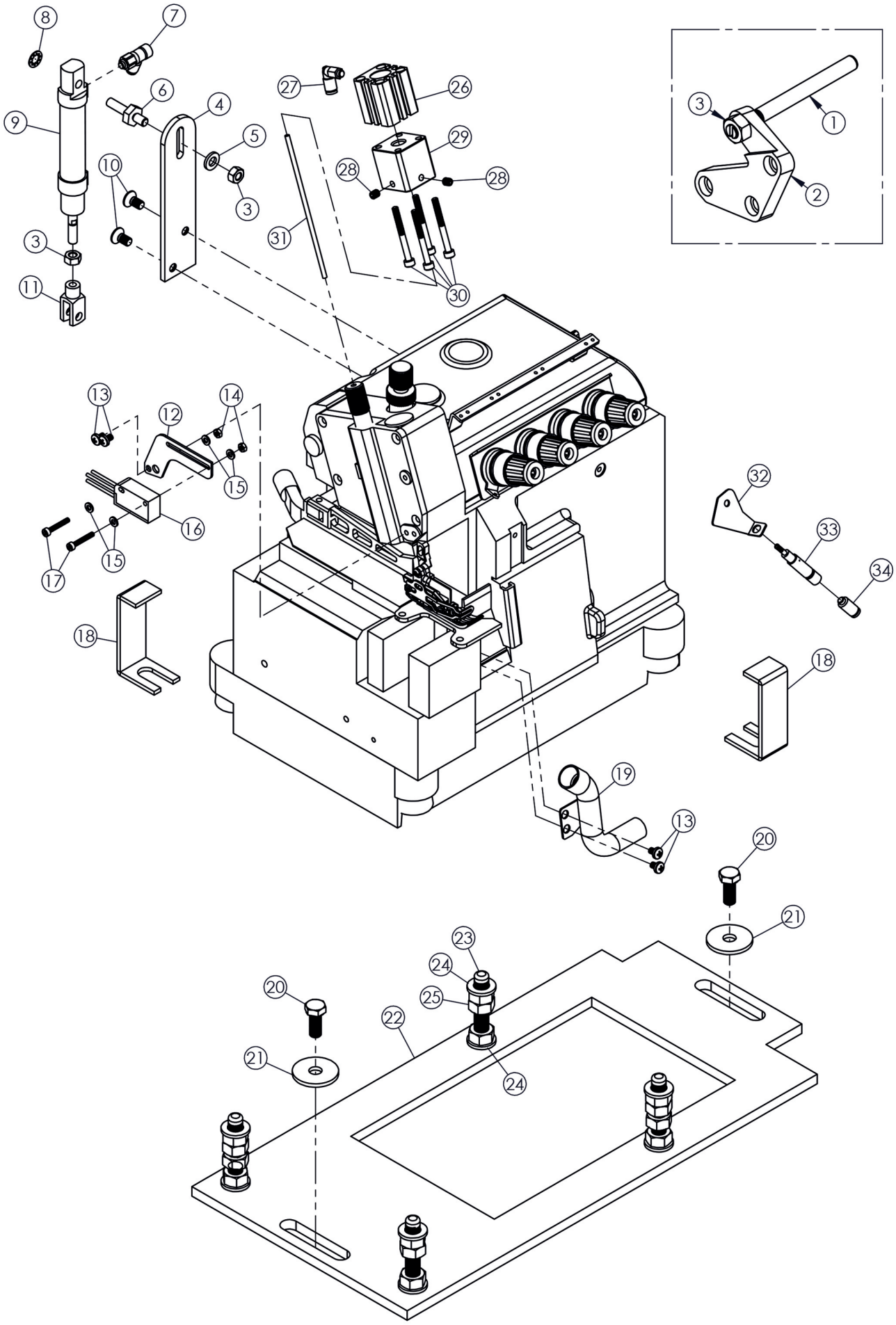
8
7
6
4
5
3
9
10
3
11
27
26
29
28
28
31
30
3
1
2
13
12
14
15
16
15
17
18
32
33
34
18
19
13
20
21
23
24
25
22
24
20
21

DET	PART NUMBERT	DESCRIPTION
1	11-10257-00-000	Adjustment Screw
2	11-10258-00-000	Bracket
3	02-11006-06-000	Nut
4	11-10102-00-000	Cylinder Support
5	03-21007-06-015	Washer
6	11-10277-00-000	Cylinder Pin
7	16-40008-05-404	Speed Controller
8	04-50004-06-000	Washer
9	16-10009-00-100	Cylinder
10	01-51038-06-012	Screw
11	17-10008-00-000	Y - Knuckle
12	11-10108-00-000	Fotocell Support
13	01-61025-04-006	Screw
14	02-11003-03-000	Nut
15	03-11003-03-000	Washer
16	10-50006-00-000	Fotocell
17	01-11021-03-020	Screw
18	11-10134-00-000	Clamp
19	11-10183-00-000	Vacuum Pipe
20	01-81076-08-020	Screw
21	03-21012-08-025	Washer
22	11-10128-00-000	Plate
23	11-10002-00-000	Screw
24	03-11008-10-000	Washer
25	02-11008-10-000	Nut
26	16-10030-00-200	Cylinder
27	16-30006-05-204	Elbow Joint
28	01-31020-05-006	Screw
29	11-10385-00-000	Cylinder Support
30	01-11043-04-040	Screw
31	11-10322-00-000	Shaft
32	11-10325-00-000	Cylinder Support
33	16-10029-00-100	Cylinder
34	16-30012-05-104	Joint

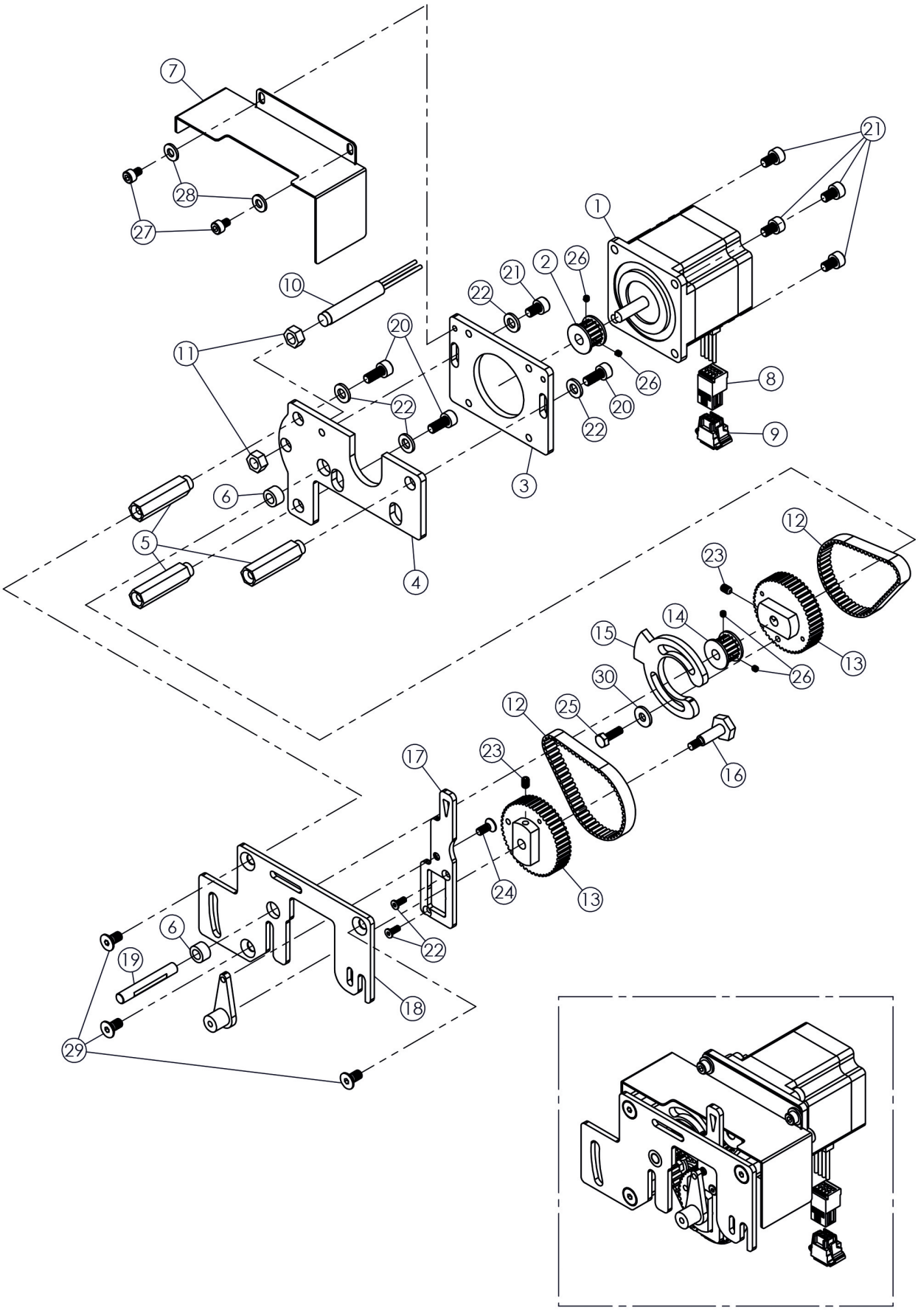
7
28
27
10
11
20
22
21
2
26
1
21
8
9
3
4
6
5
12
23
14
15
26
13
30
25
12
17
23
16
24
13
6
19
22
18
29

DET	PART NUMBERT	DESCRIPTION
1	10-40001-00-000	Step Motor
2	08-30003-00-000	Pulley
3	11-10109-00-000	Bracket
4	11-10121-00-002	Bracket
5	11-10123-00-000	Distance
6	14-10004-00-000	Bussing
7	11-10248-00-000	Cover
8	10-10002-00-000	Plug
9	10-10001-00-000	Plug
10	10-50009-00-000	Metal Sensing Swicth
11	02-91001-08-000	Nut
12	09-50001-08-177	Belt
13	08-30001-00-000	Pulley
14	08-30002-00-000	Pulley
15	11-10119-00-000	Position Plate
16	11-10103-00-000	Stud
17	11-10122-00-000	Lover
18	11-10120-00-002	Bracket
19	13-30004-00-000	Shaft
20	01-11049-05-012	Screw
21	01-11047-05-006	Screw
22	03-11005-05-000	Washer
23	01-31009-04-006	Screw
24	01-51015-04-010	Screw
25	01-81022-04-014	Screw
26	01-31001-03-003	Screw
27	01-11032-04-006	Screw
28	03-11004-04-000	Washer
29	01-81026-05-010	Screw
30	03-11004-04-000	Washer

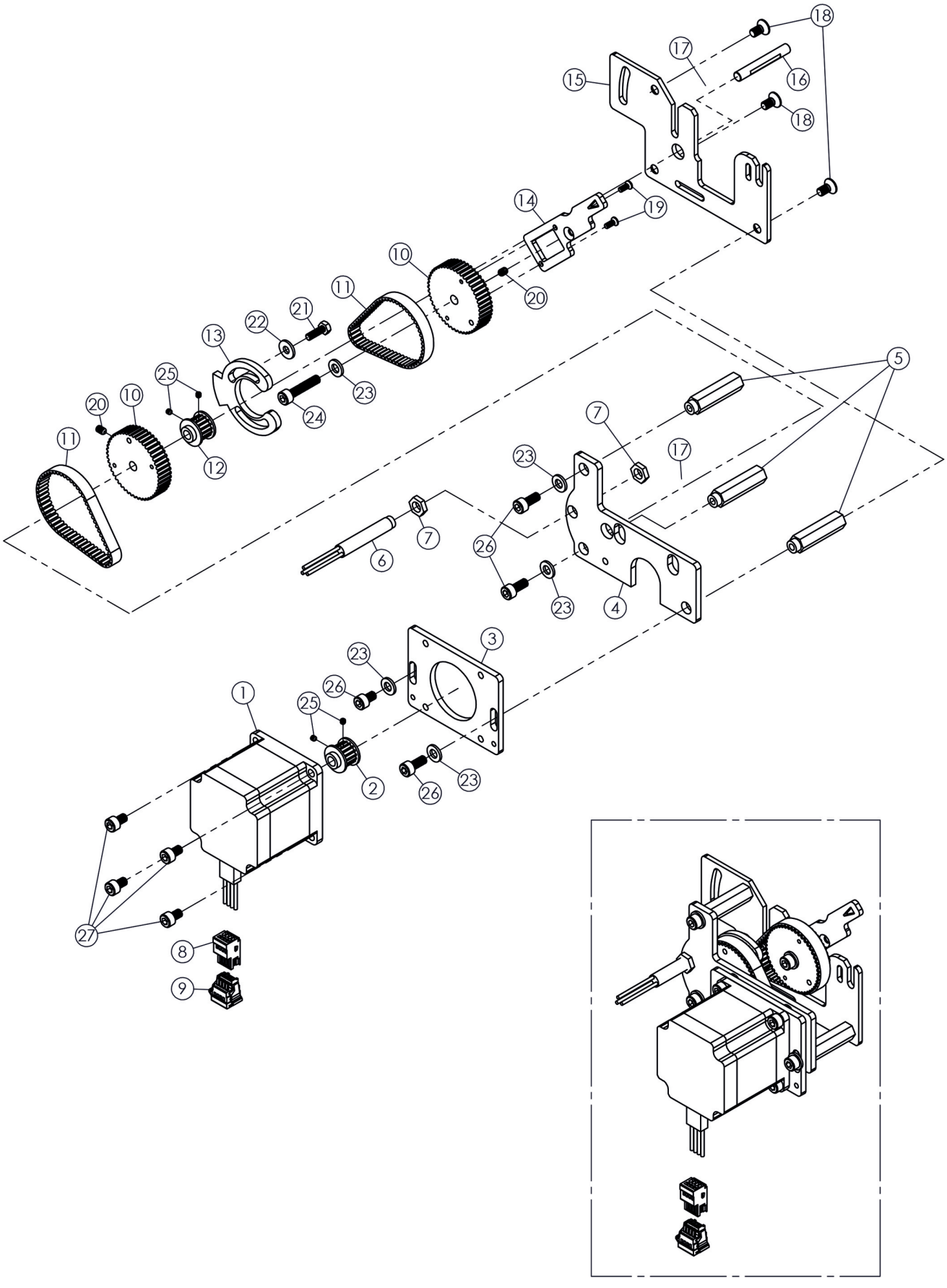
18
17
16
15
18
19
14
20
10
11
21
22
13
25
23
24
20
10
11
12
5
7
17
23
6
7
26
23
4
3
23
26
25
1
2
26
23
27
8
9

DET	PART NUMBERT	DESCRIPTION
1	10-40001-00-000	Step Motor
2	08-30003-00-000	Pulley
3	11-10109-00-000	Bracket
4	11-10121-00-000	Bracket
5	11-10123-00-000	Distance
6	10-50009-00-000	Metal Sensing Swicth
7	02-91001-08-000	Nut
8	10-10002-00-000	Plug
9	10-10001-00-000	Plug
10	08-30001-00-000	Pulley
11	09-50001-08-177	Belt
12	08-30002-00-000	Pulley
13	11-10119-00-000	Position Plate
14	11-10122-00-000	Lover
15	11-10120-00-002	Bracket
16	13-30004-00-000	Shaft
17	14-10004-00-000	Bussing
18	01-51026-05-010	Screw
19	01-51046-08-010	Screw
20	01-31004-03-006	Screw
21	01-81022-04-014	Screw
22	03-11004-04-000	Washer
23	03-11005-05-000	Washer
24	01-11053-05-025	Screw
25	01-31001-03-003	Screw
26	01-11049-05-012	Screw
27	01-11047-05-006	Screw

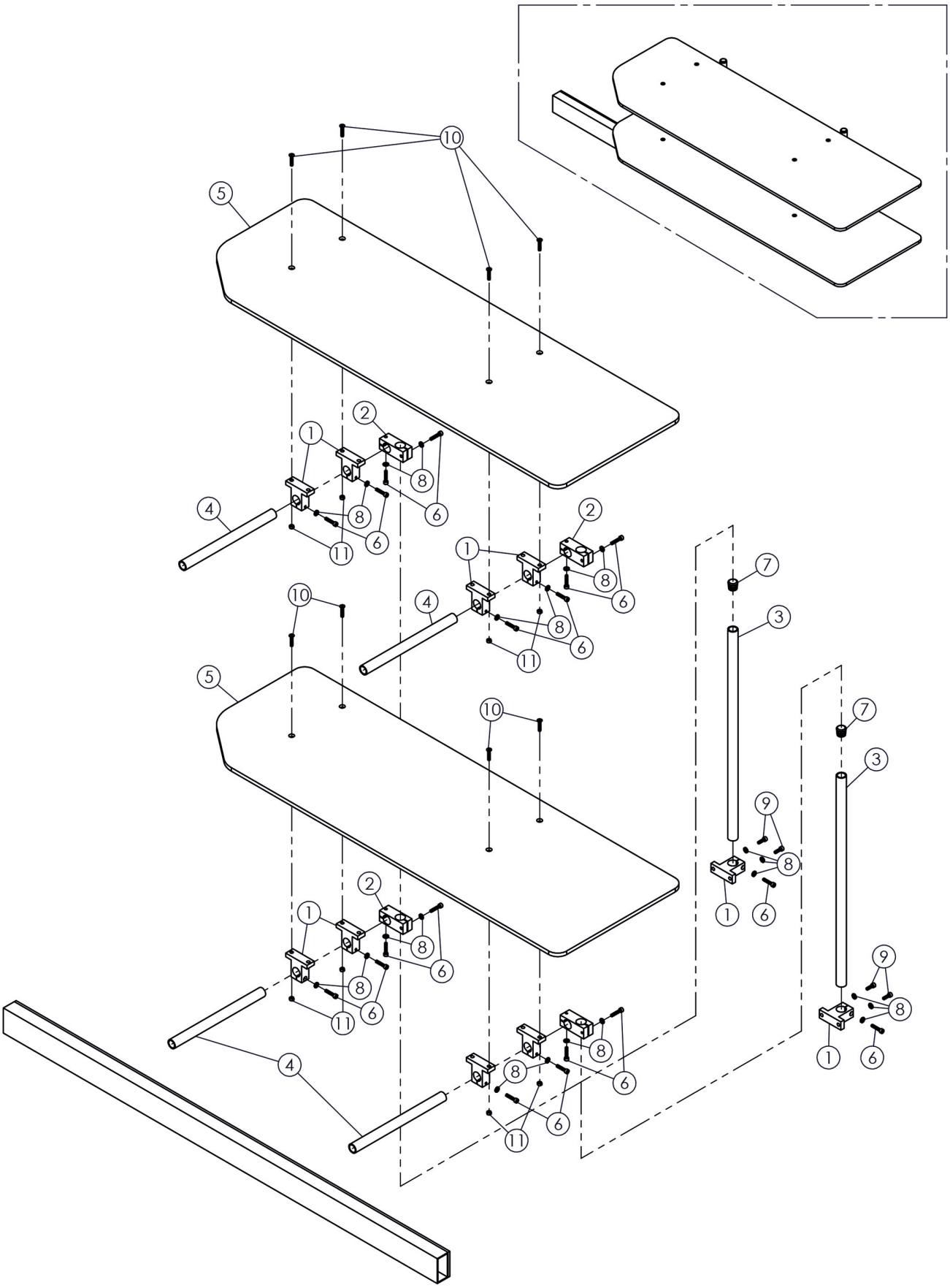
10
5
1
2
8
6
4
11
7
3
9

DET	PART NUMBERT	DESCRIPTION
1	11-10370-00-000	Support
2	11-10013-00-000	Support
3	11-40002-00-000	Pipe
4	11-40003-00-000	Pipe
5	15-10008-00-000	Table
6	03-11005-05-000	Washer
7	15-70012-00-000	Pipe Cover
8	03-11005-05-000	Washer
9	01-11050-05-016	Screw
10	01-51031-05-016	Screw
11	02-11005-05-000	Nut

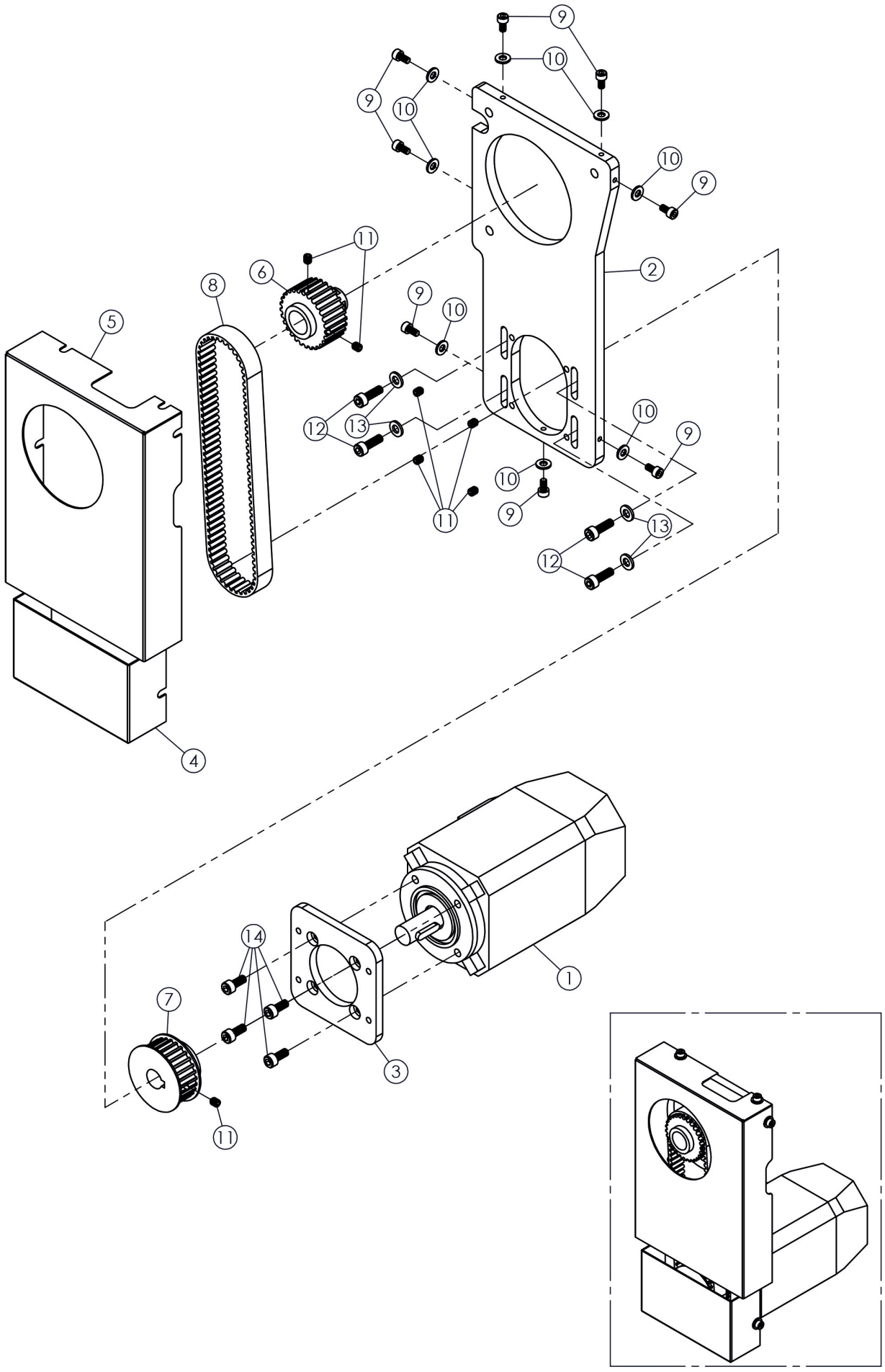
9
10
9
10
10
9
11
6
8
2
9
10
5
12
13
10
9
11
10
9
13
12
4
14
1
7
3
11

DET	PART NUMBERT	DESCRIPTION
1	10-40008-00-000	Motor
2	11-10080-00-000	Support
3	11-10081-00-000	Support
4	11-10126-00-000	Cover
5	11-10125-00-000	Cover
6	08-40001-00-000	Pulley
7	08-40002-00-000	Pulley
8	09-40001-14-460	Belt
9	01-11033-04-008	Screw
10	03-11003-03-000	Washer
11	01-31020-05-006	Screw
12	01-11050-05-016	Screw
13	03-21003-05-015	Washer
14	01-11049-05-012	Screw

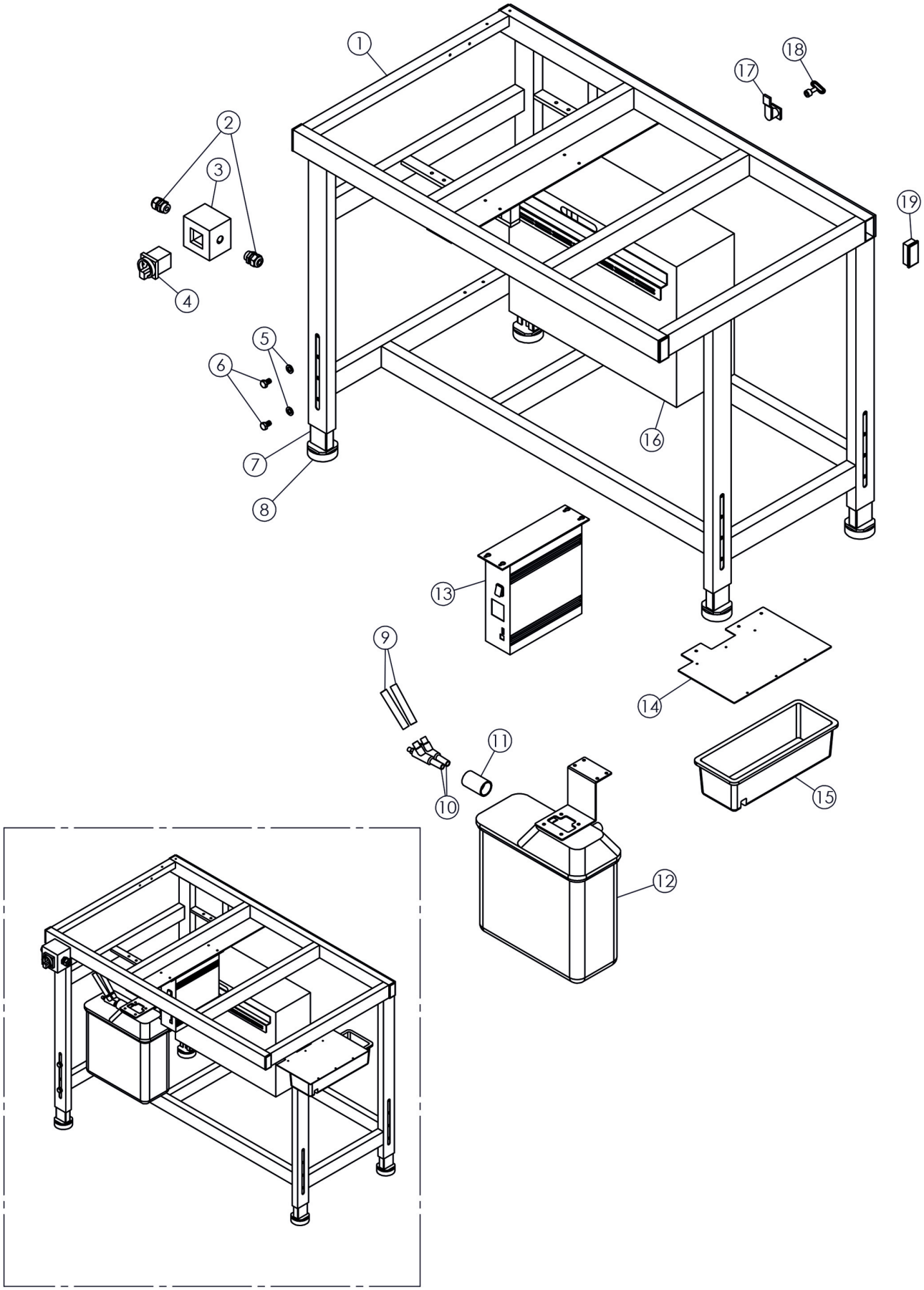
1
2
3
4
5
6
7
8
9
10
11
12
13
14
15
16
17
18
19

DET	PART NUMBERT	DESCRIPTION
1	11-70003-00-000	Frame
2	15-90008-00-000	Cable Clamp
3	10-30002-00-000	Power Swictch Box
4	10-30001-00-000	Power Swictch
5	03-11008-10-000	Washer
6	01-81094-10-016	Screw
7	11-70004-00-000	Frame Foot
8	15-90001-00-000	Adjustment Foot
9	15-90010-00-000	Vacuum Pipe
10	16-60004-00-005	Vacuum
11	15-40002-00-000	Vacuum Holder
12	15-60004-00-000	Box
13	10-40010-00-000	Motor Driver
14	11-10085-00-000	Support
15	15-60006-00-000	Tool Box
16	11-70001-00-000	Board
17	11-70006-00-000	Lock
18	11-70010-00-000	Key
19	15-70013-00-000	Pipe Cover

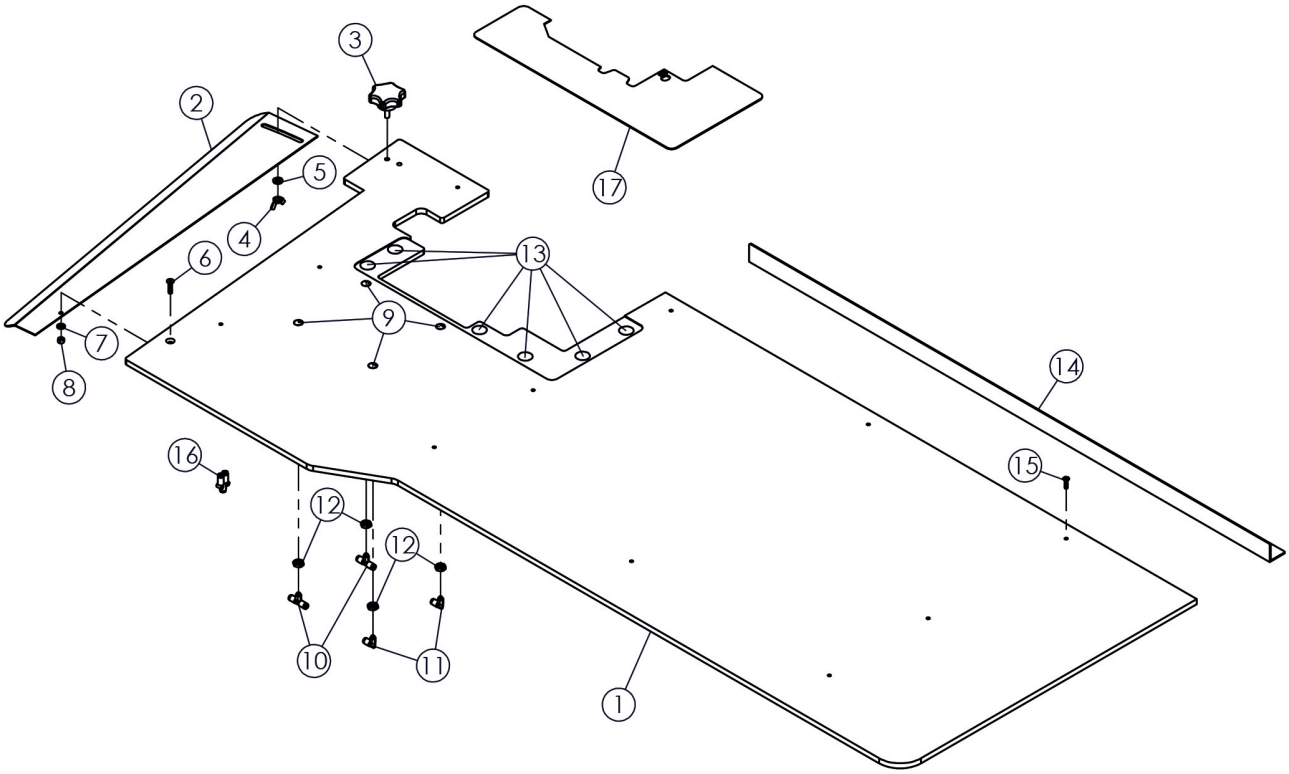
3
2
17
5
4
6
13
9
7
8
14
16
15
12
12
10
11
1

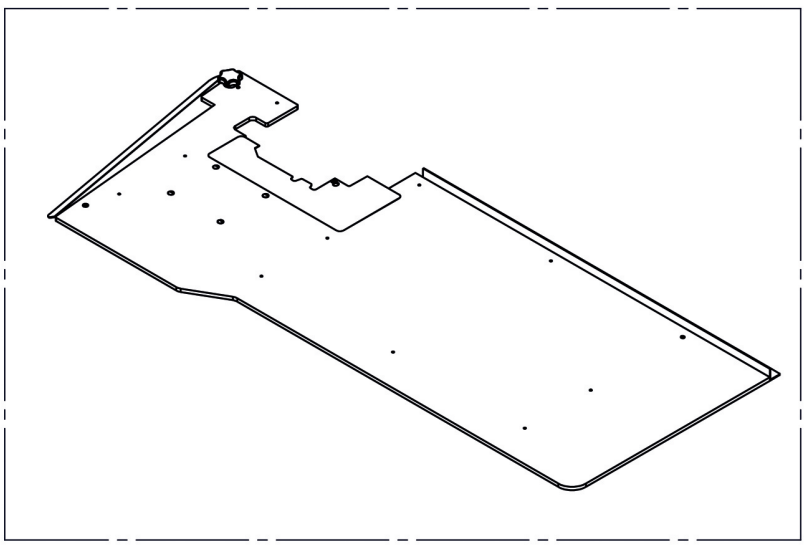

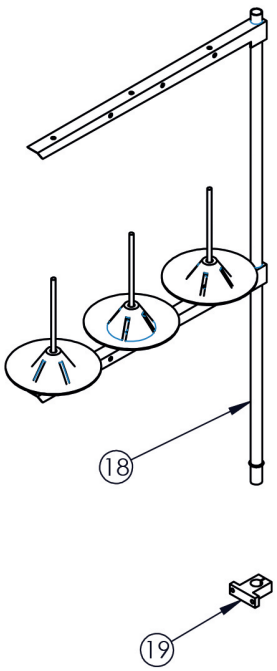
18

19

DET	PART NUMBERT	DESCRIPTION
1	15-10011-00-000	Table
2	11-10338-00-000	Stacker Plate
3	01-90002-06-025	Screw
4	02-80001-06-000	Nut
5	03-21007-06-015	Washer
6	01-51029-05-020	Screw
7	03-21003-05-015	Washer
8	02-21003-05-000	Nut
9	11-10173-00-000	Air Blowing
10	16-30009-05-304	T - Joint
11	16-30006-05-204	Elbow Joint
12	02-91002-08-100	Nut
13	17-50001-00-000	Magnet
14	11-10324-00-000	Gurde Plate
15	01-51018-04-016	Screw
16	16-30016-00-404	Y - Joint
17	11-10326-00-000	Slide Plate
18	21-10002-00-000	Thread Stand Assembly
19	11-10386-00-000	Support

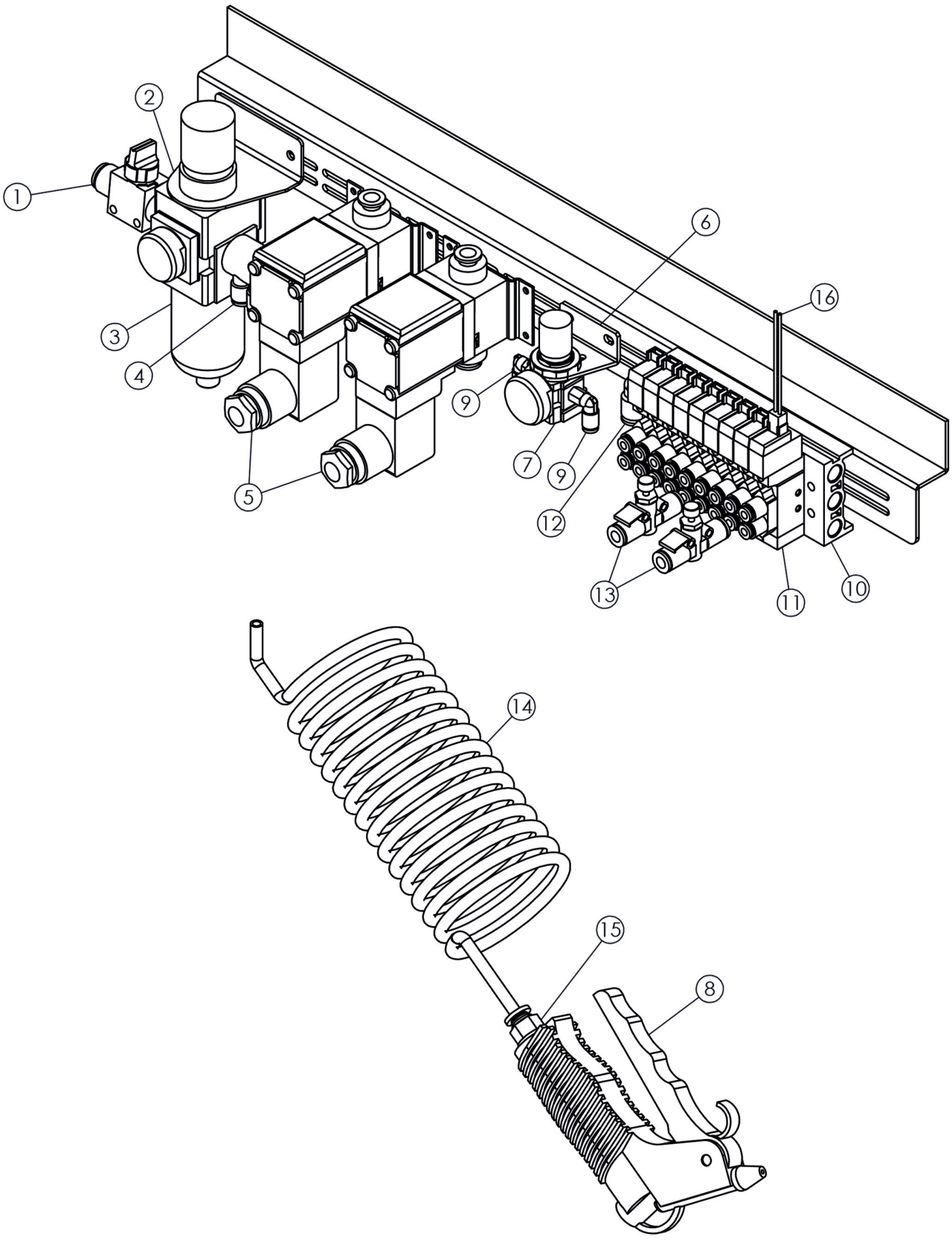
1
2
3
4
5
6
7
9
9
10
11
12
13
14
15
16
8

DET	PART NUMBERT	DESCRIPTION
1	16-60002-14-008	Air Connector Valve
2	16-70006-00-006	Regulator Holder
3	16-40012-14-100	Regulator
4	16-30004-14-306	Joint
5	16-20002-00-104	Vacuum Valve
6	16-70009-00-006	Regulator Holder
7	16-40002-05-100	Regulator
8	16-60003-14-004	Joint
9	16-30006-05-204	Elbow Joint
10	16-70016-05-009	Valve Plate
11	16-20001-00-104	Valve
12	16-30005-18-206	Elbow Joint
13	16-40009-00-304	Speed Controller
14	16-50002-06-505	Air Gun Tube
15	16-30019-14-106	Joint
16	10-20001-00-000	Air Gun

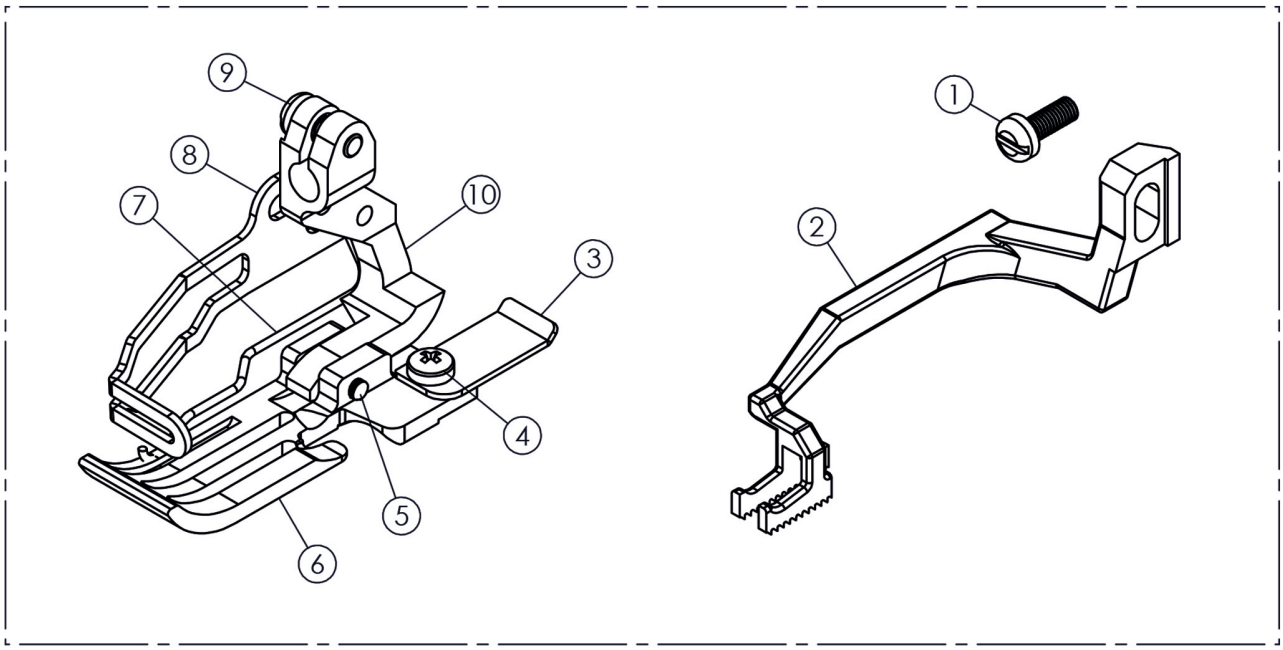
9
8
7
10
3
4
5
6
1
2

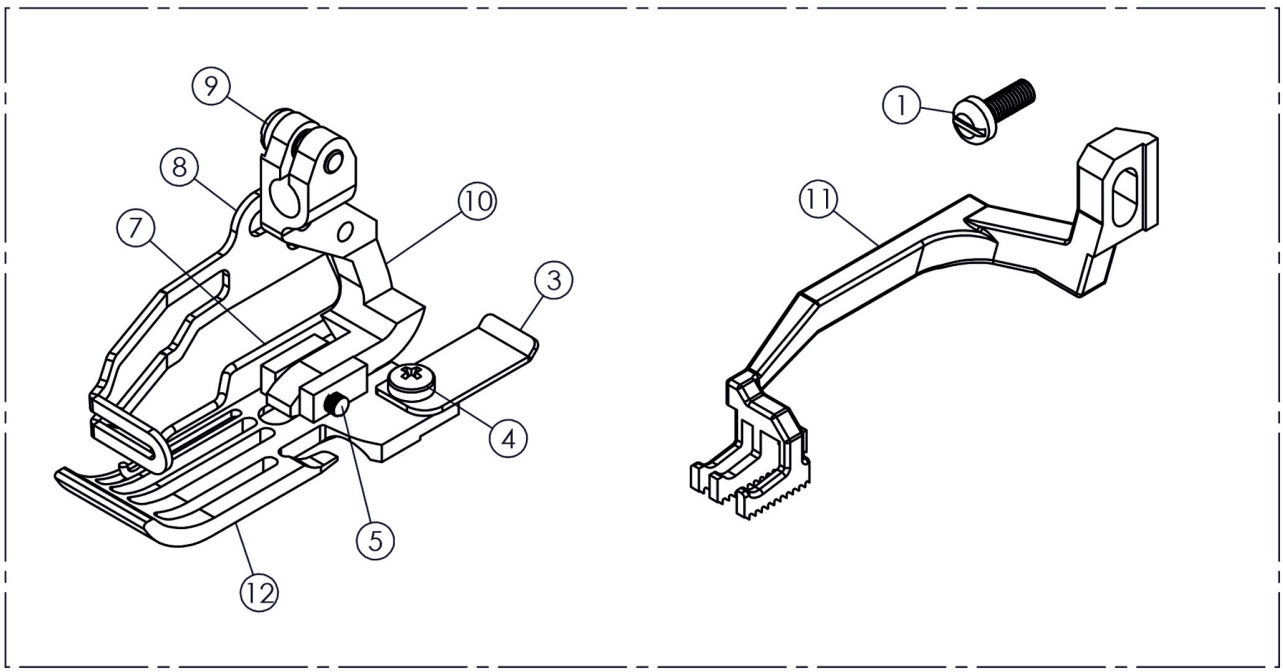
9
8
7
10
3
4
5
12
1
11

DET	PART NUMBERT	DESCRIPTION
1	0070140	Screw
2	277344	Upper Feed
3	2126680	Guide
4	01-61016-03-008	Screw
5	11-10024-00-000	Stud
6	11-10023-00-000	Foot
7	2740510	Spring
8	2741060	Guide
9	0070130	Screw
10	2771360	Foot Holder
11	277345	Upper Feed
12	11-10022-00-000	Foot

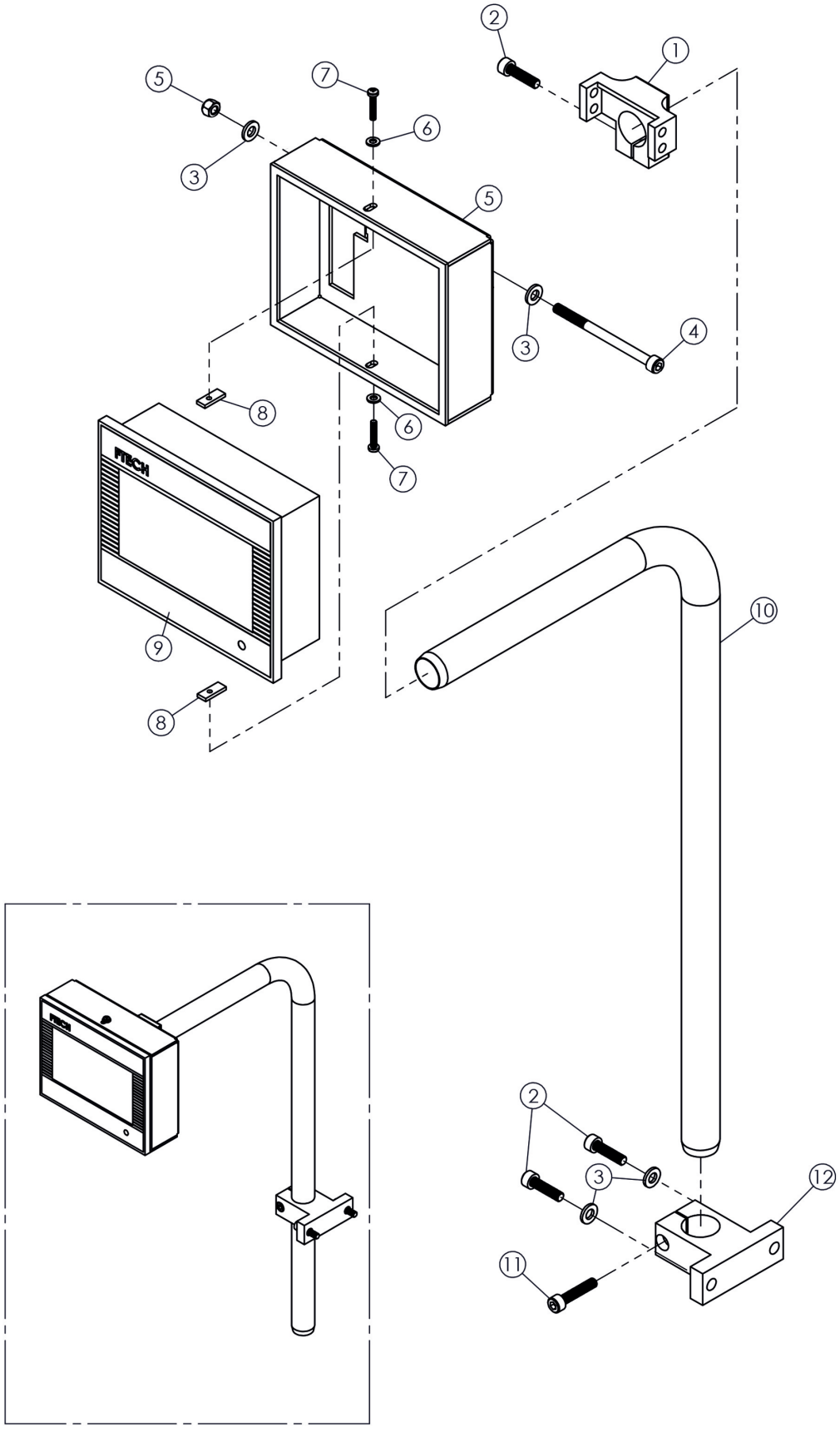
2
1
5
7
6
3
5
3
4
8
6
7
FTECH
9
8
10
2
3
12
11

DET	PART NUMBERT	DESCRIPTION
1	10-70002-00-6200	Panel
2	11-40007-00-000	Panel Support Holder
3	11-10210-00-000	Panel Support
4	01-21024-03-030	Screw
5	02-21003-05-000	Nut
6	11-10084-00-000	Cover Mounting Nut
7	03-11003-03-000	Washer
8	01-21016-03-008	Screw
9	01-11062-05-070	Screw
10	03-11005-00-000	Washer
11	01-11073-06-035	Screw
12	11-10170-00-000	Support
13	03-11006-06-000	Washer
14	01-11070-06-020	Screw
15	01-11054-05-030	Screw
16	02-11003-03-000	Nut
17	11-10260-00-000	Panel Mounting Cover

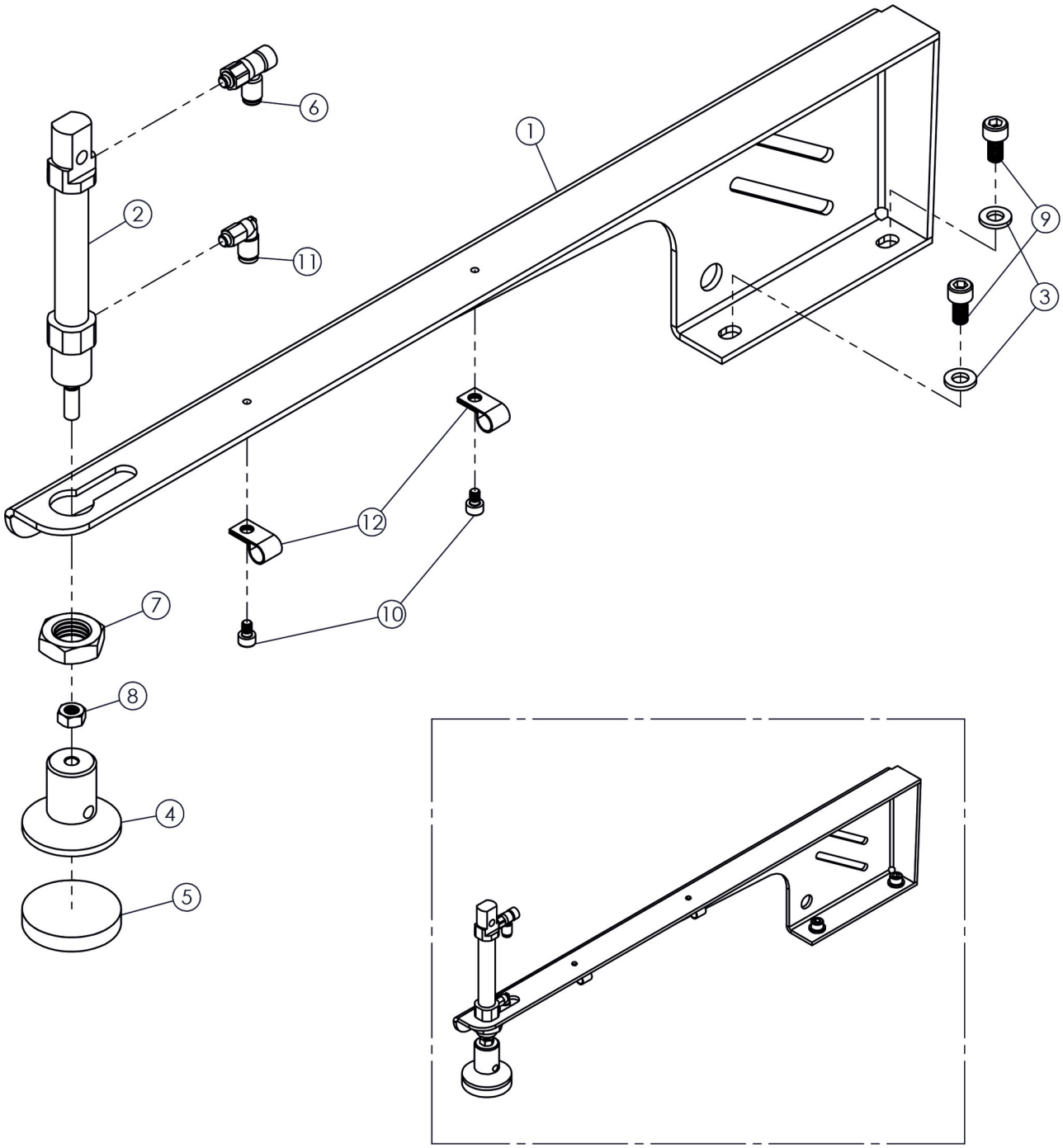
6
1
2
11
9
3
12
7
10
8
4
5

DET	PART NUMBERT	DESCRIPTION
1	11-10124-00-000	Support
2	16-10031-00-100	Cylinder
3	03-21007-06-015	Washer
4	11-10178-00-000	Patch Holder
5	15-80002-00-000	Rubber
6	16-40007-05-404	Speed Controller
7	02-91007-16-150	Washer
8	02-11006-06-000	Nut
9	01-11049-05-012	Screw
10	01-11032-04-006	Screw
11	16-30006-05-204	Elbow Joint
12	15-60008-00-000	Table Clamp

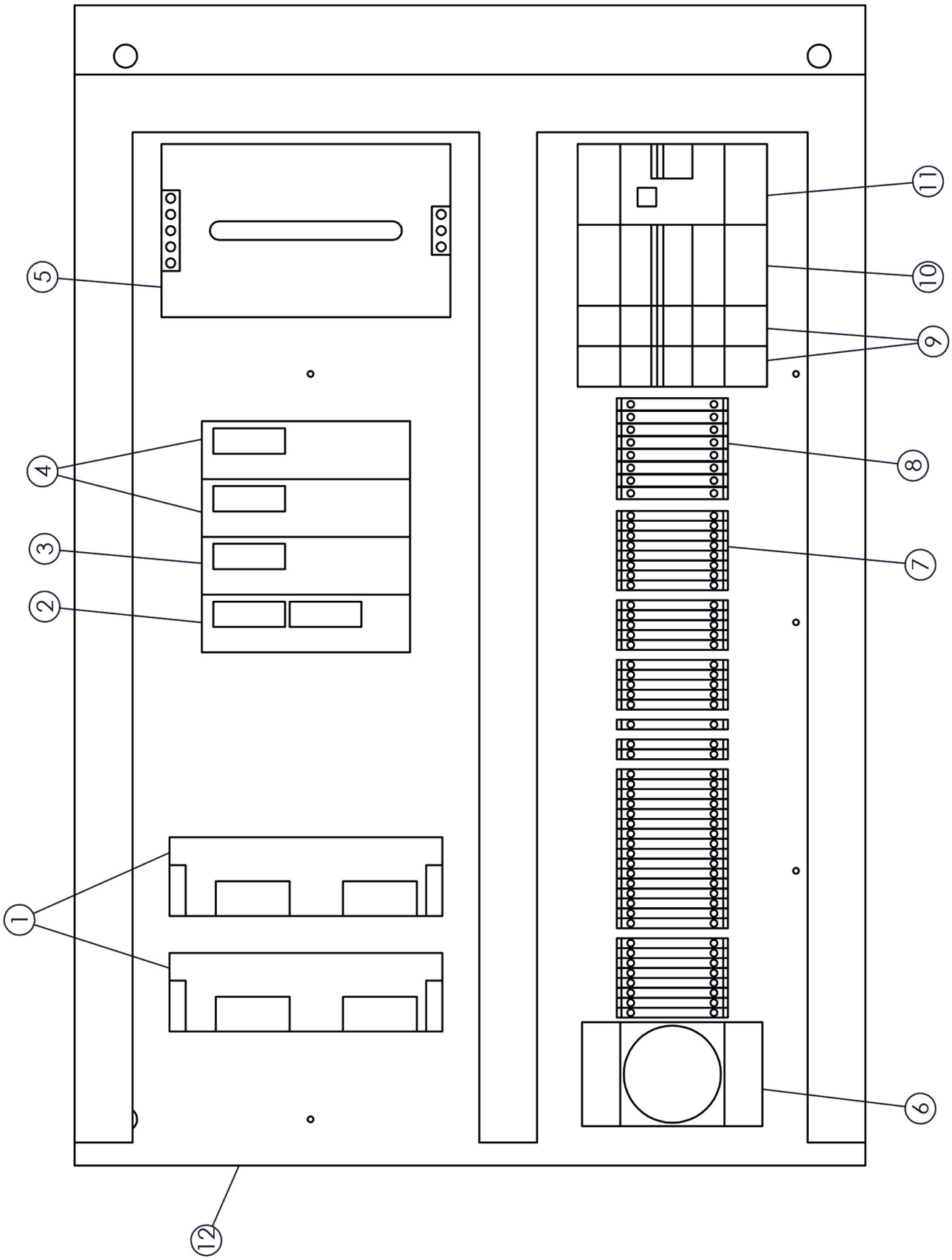
1
2
3
4
5
6
7
8
9
10
11
12

DET	PART NUMBERT	DESCRIPTION
1	10-40002-00-000	Plc
2	10-40013-00-6200	Plc
3	10-40014-00-000	Analog Card
4	10-40016-00-000	Out Module
5	10-30009-00-000	Power
6	10-30007-00-000	Power Point
7	10-10004-00-000	Terminal
8	10-10005-00-000	Terminal
9	10-30012-00-000	Fuse
10	10-30011-00-000	Fuse
11	10-40002-00-000	Circuit Breaker Relay
12	11-70005-00-000	Plate
13	10-40002-00-000	Step Motor Driver

PART NUMBERT	PAGE	DETAIL
0050300	12	4
0070130	12	9
0070140	12	1
277344	12	2
277345	12	11
2126680	12	3
2740510	12	7
2741060	12	8
2771360	12	10
01-11014-03-005	01	14
01-11016-03-008	02	26
01-11018-03-012	01	9
01-11018-04-012	02	47
01-11021-03-020	01	1
01-11021-03-020	04	17
01-11032-04-006	05	27
01-11032-04-006	14	10
01-11033-04-008	03	20
01-11033-04-008	08	9
01-11034-04-010	02	34
01-11034-04-010	03	25
01-11038-04-020	03	22
01-11041-04-030	03	30
01-11043-04-040	04	30
01-11047-05-006	05	21
01-11047-05-006	06	27
01-11049-05-012	05	20
01-11049-05-012	06	26
01-11049-05-012	08	14
01-11049-05-012	14	9
01-11050-05-016	07	9
01-11050-05-016	08	12
01-11051-05-020	03	24
01-11053-05-025	06	24
01-11069-06-016	03	11
01-31001-03-003	05	26
01-31001-03-003	06	25
01-31002-03-004	01	7
01-31004-03-006	06	20
01-31008-04-004	01	5
01-31009-04-006	05	23
01-31020-05-006	04	28
01-31020-05-006	08	11
01-31022-04-010	03	26
01-41022-05-010	01	2
01-51005-03-010	02	37

PART NUMBERT	PAGE	DETAIL
01-51015-04-010	05	24
01-51018-04-016	10	15
01-51026-05-010	06	18
01-51029-05-020	10	6
01-51031-05-016	07	10
01-51038-06-012	04	10
01-51041-06-025	01	12
01-51046-08-010	06	19
01-61025-04-006	04	13
01-61027-04-010	03	23
01-81022-04-014	05	25
01-81022-04-014	06	21
01-81026-05-010	05	29
01-81076-08-020	04	20
01-81094-10-016	09	6
01-90002-06-025	10	3
02-11003-03-000	04	14
02-11004-04-000	03	29
02-11005-05-000	02	40
02-11005-05-000	07	11
02-11006-06-000	02	48
02-11006-06-000	03	27
02-11006-06-000	04	3
02-11006-06-000	14	8
02-11008-10-000	04	25
02-21001-03-000	01	20
02-21003-05-000	10	8
02-51001-06-000	01	11
02-80001-06-000	10	4
02-91001-08-000	02	27
02-91001-08-000	05	11
02-91001-08-000	06	7
02-91002-08-100	10	12
02-91007-16-150	03	28
02-91007-16-150	14	7
03-11003-03-000	02	35
03-11003-03-000	04	15
03-11003-03-000	08	10
03-11004-04-000	02	31
03-11004-04-000	03	21
03-11004-04-000	05	28
03-11004-04-000	05	30
03-11004-04-000	06	22
03-11005-05-000	01	3
03-11005-05-000	05	22
03-11005-05-000	06	23

PART NUMBERT	PAGE	DETAIL
03-11005-05-000	07	6
03-11005-05-000	07	8
03-11008-10-000	04	24
03-11008-10-000	09	5
03-21001-03-000	01	4
03-21003-05-015	08	13
03-21003-05-015	10	7
03-21007-06-015	03	9
03-21007-06-015	04	5
03-21007-06-015	10	5
03-21007-06-015	14	3
03-21012-08-025	04	21
03-31003-03-000	03	31
04-20003-05-000	01	22
04-50004-06-000	04	8
05-10001-00-000	01	16
05-10001-00-000	01	19
05-20004-00-000	03	12
05-20005-00-000	02	45
06-10001-18-028	02	33
07-40003-12-022	03	2
08-30001-00-000	05	13
08-30001-00-000	06	10
08-30002-00-000	05	14
08-30002-00-000	06	12
08-30003-00-000	05	2
08-30003-00-000	06	2
08-40001-00-000	08	6
08-40002-00-000	08	7
09-40001-14-460	08	8
09-50001-08-177	05	12
09-50001-08-177	06	11
10-10001-00-000	05	9
10-10001-00-000	06	9
10-10002-00-000	05	8
10-10002-00-000	06	8
10-10004-00-000	15	7
10-10005-00-000	15	8
10-20001-00-000	11	16
10-20001-00-000	13	16
10-30001-00-000	09	4
10-30002-00-000	09	3
10-30007-00-000	15	6
10-30009-00-000	15	5
10-30011-00-000	15	10
10-30012-00-000	15	9

PART NUMBERT	PAGE	DETAIL
10-40001-00-000	05	1
10-40001-00-000	06	1
10-40002-00-000	15	1
10-40002-00-000	15	11
10-40002-00-000	15	13
10-40008-00-000	08	1
10-40010-00-000	09	13
10-40013-00-6200	15	2
10-40014-00-000	15	3
10-40016-00-000	15	4
10-50006-00-000	04	16
10-50009-00-000	05	10
10-50009-00-000	06	6
11-10002-00-000	04	23
11-10013-00-000	07	2
11-10016-00-002	03	8
11-10022-00-000	12	12
11-10023-00-000	12	6
11-10024-00-000	12	5
11-10080-00-000	08	2
11-10081-00-000	08	3
11-10085-00-000	09	14
11-10102-00-000	04	4
11-10103-00-000	05	16
11-10106-00-000	01	25
11-10108-00-000	04	12
11-10109-00-000	05	3
11-10109-00-000	06	3
11-10119-00-000	05	15
11-10119-00-000	06	13
11-10120-00-002	05	18
11-10120-00-002	06	15
11-10121-00-000	06	4
11-10121-00-002	05	4
11-10122-00-000	05	17
11-10122-00-000	06	14
11-10123-00-000	05	5
11-10123-00-000	06	5
11-10124-00-000	14	1
11-10125-00-000	08	5
11-10126-00-000	08	4
11-10128-00-000	04	22
11-10134-00-000	04	18
11-10136-00-000	03	1
11-10173-00-000	02	38
11-10173-00-000	10	9

PART NUMBERT	PAGE	DETAIL
11-10178-00-000	14	4
11-10183-00-000	04	19
11-10186-00-000	01	15
11-10192-00-000	02	29
11-10211-00-000	03	6
11-10248-00-000	05	7
11-10257-00-000	04	1
11-10258-00-000	04	2
11-10277-00-000	04	6
11-10322-00-000	04	31
11-10323-00-000	03	3
11-10324-00-000	10	14
11-10325-00-000	04	32
11-10326-00-000	10	17
11-10327-00-000	02	49
11-10328-00-000	02	39
11-10329-00-000	01	21
11-10330-00-000	02	44
11-10331-00-000	02	28
11-10332-00-000	02	46
11-10333-00-000	01	18
11-10334-00-000	01	17
11-10335-00-000	02	36
11-10336-00-000	03	5
11-10337-00-000	01	6
11-10338-00-000	10	2
11-10339-00-000	03	13
11-10370-00-000	07	1
11-10381-00-005	02	41
11-10382-00-000	03	4
11-10383-00-002	02	32
11-10384-00-000	01	8
11-10385-00-000	04	29
11-10386-00-000	10	19
11-40002-00-000	07	3
11-40003-00-000	07	4
11-70001-00-000	09	16
11-70003-00-000	09	1
11-70004-00-000	09	7
11-70005-00-000	15	12
11-70006-00-000	09	17
11-70010-00-000	09	18
13-20001-00-000	01	10
13-30004-00-000	05	19
13-30004-00-000	06	16
13-30006-00-000	02	30

PART NUMBERT	PAGE	DETAIL
14-10004-00-000	05	6
14-10004-00-000	06	17
15-10008-00-000	07	5
15-10011-00-000	10	1
15-30001-00-000	01	13
15-40002-00-000	09	11
15-60004-00-000	09	12
15-60006-00-000	09	15
15-60008-00-000	03	14
15-60008-00-000	14	12
15-70012-00-000	07	7
15-70013-00-000	09	19
15-80002-00-000	14	5
15-90001-00-000	09	8
15-90008-00-000	09	2
15-90010-00-000	09	9
16-10009-00-100	04	9
16-10017-00-100	03	10
16-10028-00-100	02	42
16-10029-00-100	04	33
16-10029-00-100	04	26
16-10030-00-200	01	23
16-10031-00-100	14	2
16-20001-00-104	11	11
16-20001-00-104	13	11
16-20002-00-104	11	5
16-20002-00-104	13	5
16-20003-18-200	03	7
16-30004-14-306	11	4
16-30004-14-306	13	4
16-30005-18-206	03	16
16-30005-18-206	11	12
16-30005-18-206	13	12
16-30006-05-204	04	27
16-30006-05-204	10	11
16-30006-05-204	11	9
16-30006-05-204	13	9
16-30006-05-204	14	11
16-30009-05-304	10	10
16-30011-18-208	03	17
16-30012-05-104	01	24
16-30012-05-104	02	50
16-30012-05-104	04	34
16-30013-00-058	03	19
16-30016-00-404	10	16
16-30018-00-608	03	15

PART NUMBERT	PAGE	DETAIL
16-30019-14-106	11	15
16-40002-05-100	11	7
16-40002-05-100	13	7
16-40004-18-404	03	18
16-40007-05-404	14	6
16-40008-05-404	02	43
16-40008-05-404	04	7
16-40009-00-304	11	13
16-40009-00-304	13	13
16-40012-14-100	11	3
16-40012-14-100	13	3
16-50002-06-505	11	14
16-50002-06-505	13	14
16-60002-14-008	11	1
16-60002-14-008	13	1
16-60003-14-004	11	8
16-60003-14-004	13	15
16-60004-00-005	09	10
16-70006-00-006	11	2
16-70006-00-006	13	2
16-70008-00-006	13	8
16-70009-00-006	11	6
16-70009-00-006	13	6
16-70016-05-009	11	10
16-70016-05-009	13	10
17-10008-00-000	04	11
17-50001-00-000	10	13
19-10029-00-100	01	23
21-10002-00-000	10	18

FTECH

Dikiş Otomat Sistemleri

Orta Mah/ Maltepe Cad. Emintaş Akel İş Merkezi No:10/142 Bayrampaşa / İSTANBUL - TÜRKİYE
Tel:+90 212 505 98 91 / 92 - Faks: +90 212 505 98 93 - İnfo@untasmakina.com