FTECH

Dikiş Otomat Sistemleri

# MODEL FT-9100

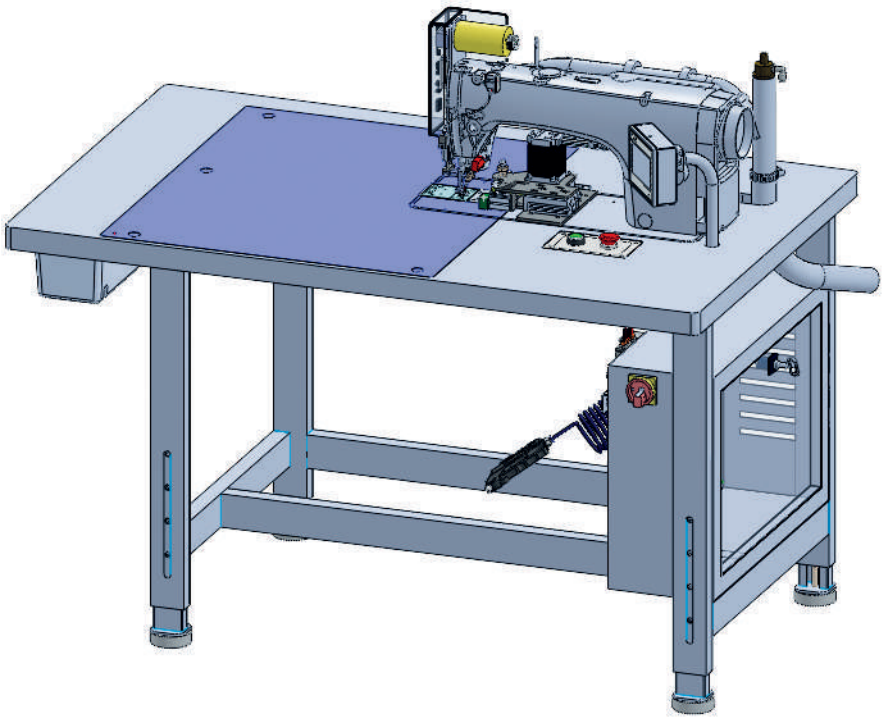

## AUTOJIG

# PARTS MANUAL

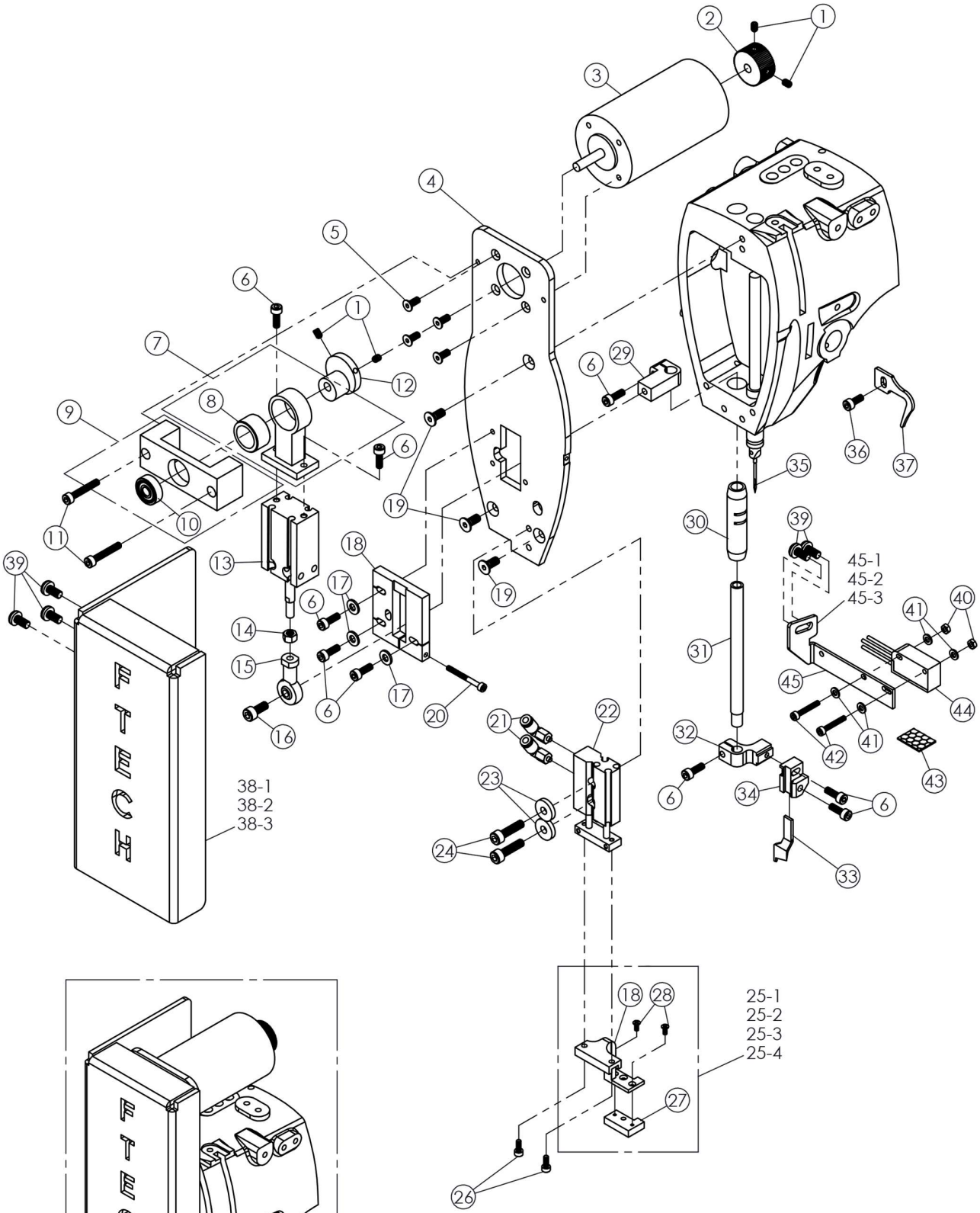
FTECH
38-1
38-2
38-3
45-1
45-2
45-3
25-1
25-2
25-3
25-4

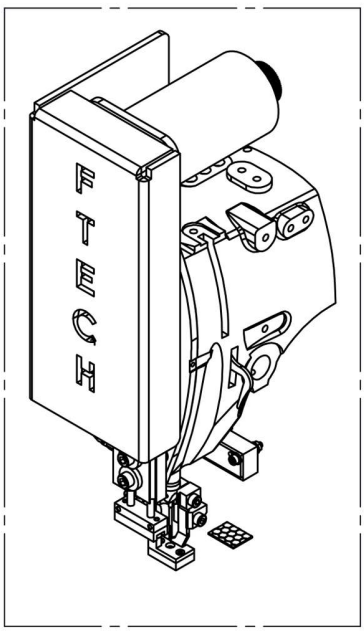
FTECH

| DET | PART NUMBERT | DESCRIPTION |
|---|---|---|
| 1 | 01-31009-04-006 | Screw |
| 2 | 11-10366-00-000 | Hand Puly |
| 3 | 10-40005-00-000 | DC Motor |
| 4-1 | 11-10052-00-7200 | Head Cover Plate For Brother 7200 |
| 4-2 | 11-10052-00-7250 | Head Cover Plate For Brother 7250 |
| 4-3 | 11-10052-00-7300 | Head Cover Plate For Brother 7300 |
| 5 | 01-51015-04-010 | Screw |
| 6 | 01-11035-04-012 | Screw |
| 7 | 11-10367-00-000 | Link |
| 8 | 07-20002-16-022 | Bearing |
| 9 | 11-10368-00-000 | Motor Shaft Guide |
| 10 | 07-10004-06-019 | Bearing |
| 11 | 01-11040-04-025 | Screw |
| 12 | 11-10067-00-000 | Knife Cam |
| 13 | 16-10016-00-200 | Cylinder |
| 14 | 02-11005-05-000 | Nut |
| 15 | 17-10003-05-000 | Rod End |
| 16 | 01-11050-05-016 | Screw |
| 17 | 03-11004-04-000 | Washer |
| 18 | 11-10064-00-000 | Slide Block |
| 19 | 01-51027-05-012 | Screw |
| 20 | 01-11023-03-025 | Screw |
| 21 | 16-30008-03-204 | Elbow Joint |
| 22 | 16-10007-00-400 | Cylinder |
| 23 | 03-21003-05-015 | Washer |
| 24 | 01-11051-05-020 | Screw |
| 25-1 | 11-10093-35-000 | Clamp Arm ( 3,5 mm ) |
| 25-2 | 11-10093-40-000 | Clamp Arm ( 4 mm ) |
| 25-3 | 11-10093-45-000 | Clamp Arm ( 4,5 mm ) |
| 25-4 | 11-10093-50-000 | Clamp Arm ( 5 mm ) |

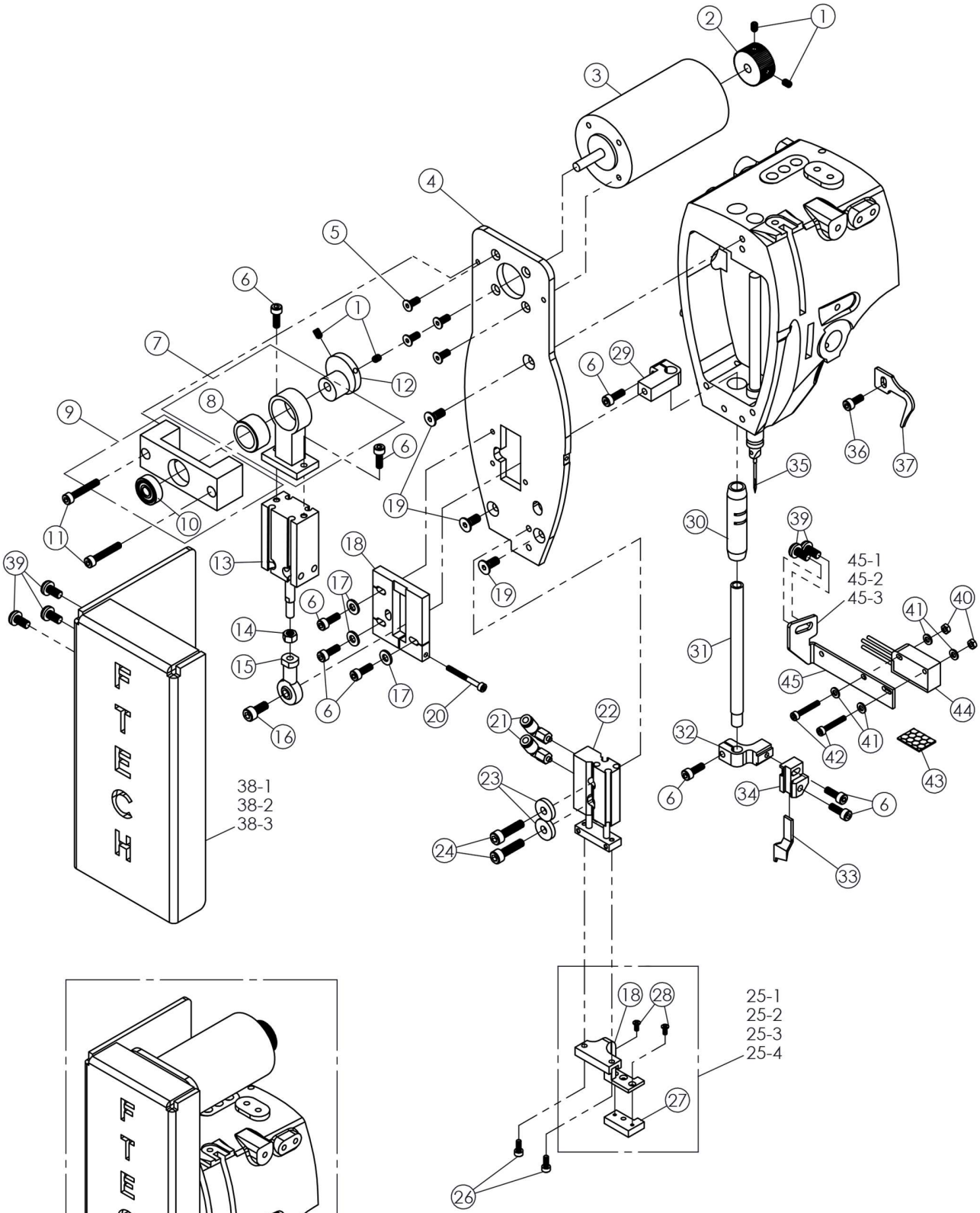
FTECH
38-1
38-2
38-3
45-1
45-2
45-3
25-1
25-2
25-3
25-4

| DET | PART NUMBERT | DESCRIPTION |
|---|---|---|
| 26 | 01-11016-03-008 | Screw |
| 27-1 | 15-40005-35-000 | Clamp Foot ( 3,5 mm ) |
| 27-2 | 15-40005-40-000 | Clamp Foot ( 4 mm ) |
| 27-3 | 15-40005-45-000 | Clamp Foot ( 4,5 mm ) |
| 27-4 | 15-40005-50-000 | Clamp Foot ( 5 mm ) |
| 28 | 01-61010-25-008 | Screw |
| 29 | 11-10029-00-000 | Knife Bar Guide Stide Block |
| 30 | 14-50001-00-000 | Knife Bar Bushing |
| 31 | 13-50001-00-000 | Knife Bar |
| 32 | 11-10057-00-000 | Knife Adjustable Block |
| 33-1 | 18-10001-00-000 | Knife ( 9 mm ) |
| 33-2 | 18-10002-00-000 | Knife ( 7 mm ) |
| 34 | 11-10059-00-000 | Knife Holder |
| 35 | 135x17 ( DPx17 ) | Needle |
| 36 | 01-11034-04-010 | Screw |
| 37 | 11-10110-00-000 | Thread Take-Up |
| 38-1 | 15-30002-00-7200 | Cover For Brother 7200 |
| 38-2 | 15-30002-00-7250 | Cover For Brother 7250 |
| 38-3 | 15-30002-00-7300 | Cover For Brother 7300 |
| 39 | 01-21048-05-010 | Screw |
| 40 | 02-11003-03-000 | Nut |
| 41 | 03-11003-03-000 | Washer |
| 42 | 01-11021-03-020 | Screw |
| 43 | 10-80002-00-000 | Reflector |
| 44 | 10-50005-00-000 | Fotocell |
| 45-1 | 11-10055-00-7200 | Fotocell Support For Brother 7200 |
| 45-2 | 11-10055-00-7250 | Fotocell Support For Brother 7250 |
| 45-3 | 11-10055-00-7300 | Fotocell Support For Brother 7300 |

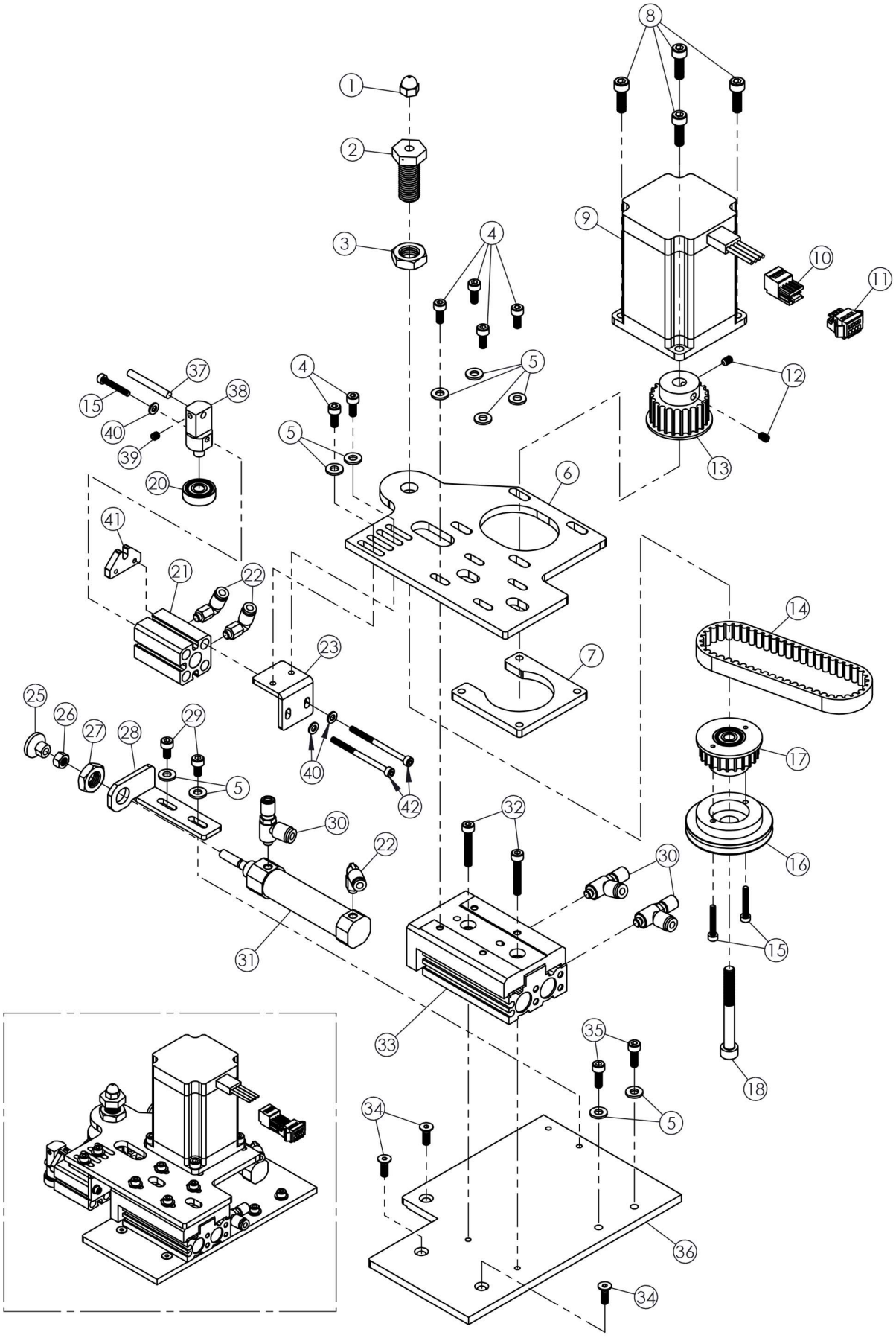
1
2
3
4
5
6
7
8
9
10
11
12
13
14
15
16
17
18
20
21
22
23
25
26
27
28
29
30
31
32
33
34
35
36
37
38
39
40
41
42

| DET | PART NUMBERT | DESCRIPTION |
|---|---|---|
| 1 | 02-31004-06-000 | Nut |
| 2 | 11-50001-00-000 | Screw |
| 3 | 02-61006-12-000 | Nut |
| 4 | 01-11050-05-016 | Screw |
| 5 | 03-21002-04-012 | Washer |
| 6 | 11-10061-00-000 | Mounting Plate |
| 7 | 11-10051-00-000 | Fixing Plate |
| 8 | 01-11050-05-016 | Screw |
| 9 | 10-40011-00-000 | Step Motor |
| 10 | 10-10002-00-000 | Plug |
| 11 | 10-10001-00-000 | Plug |
| 12 | 01-31020-05-006 | Screw |
| 13 | 08-20003-00-000 | Puly |
| 14 | 09-20002-10-260 | Belt |
| 15 | 01-11020-03-016 | Screw |
| 16 | 11-10065-00-000 | Puly |
| 17 | 08-20004-00-000 | Puly |
| 18 | 01-11078-06-060 | Screw |
| 19 | 01-11020-03-016 | Screw |
| 20 | 07-10004-06-019 | Bearing |
| 21 | 16-10013-00-200 | Cylinder |
| 22 | 16-30006-05-204 | Elbow Joint |
| 23 | 11-10066-00-000 | Cylinder Support |
| 24 | 01-11037-04-016 | Screw |
| 25 | 11-10372-00-000 | Pusher |
| 26 | 02-11005-05-000 | Nut |
| 27 | 02-91004-10-125 | Nut |
| 28 | 11-10047-00-000 | Cylinder Support |
| 29 | 01-11033-04-008 | Screw |
| 30 | 16-40007-05-404 | Speed Controller |
| 31 | 16-10005-00-100 | Cylinder |
| 32 | 01-11040-04-025 | Screw |
| 33 | 16-10006-00-500 | Cylinder |
| 34 | 01-51016-04-012 | Screw |
| 35 | 01-11035-04-012 | Screw |
| 36 | 11-10062-00-000 | Mounting Plate |
| 37 | 11-10475-00-000 | Shaft |
| 38 | 11-10476-00-000 | Bearing Support |
| 39 | 01-31008-04-004 | Screw |
| 40 | 03-11003-03-000 | Washer |
| 41 | 11-10082-00-000 | Slide Block |
| 42 | 01-11027-03-040 | Screw |

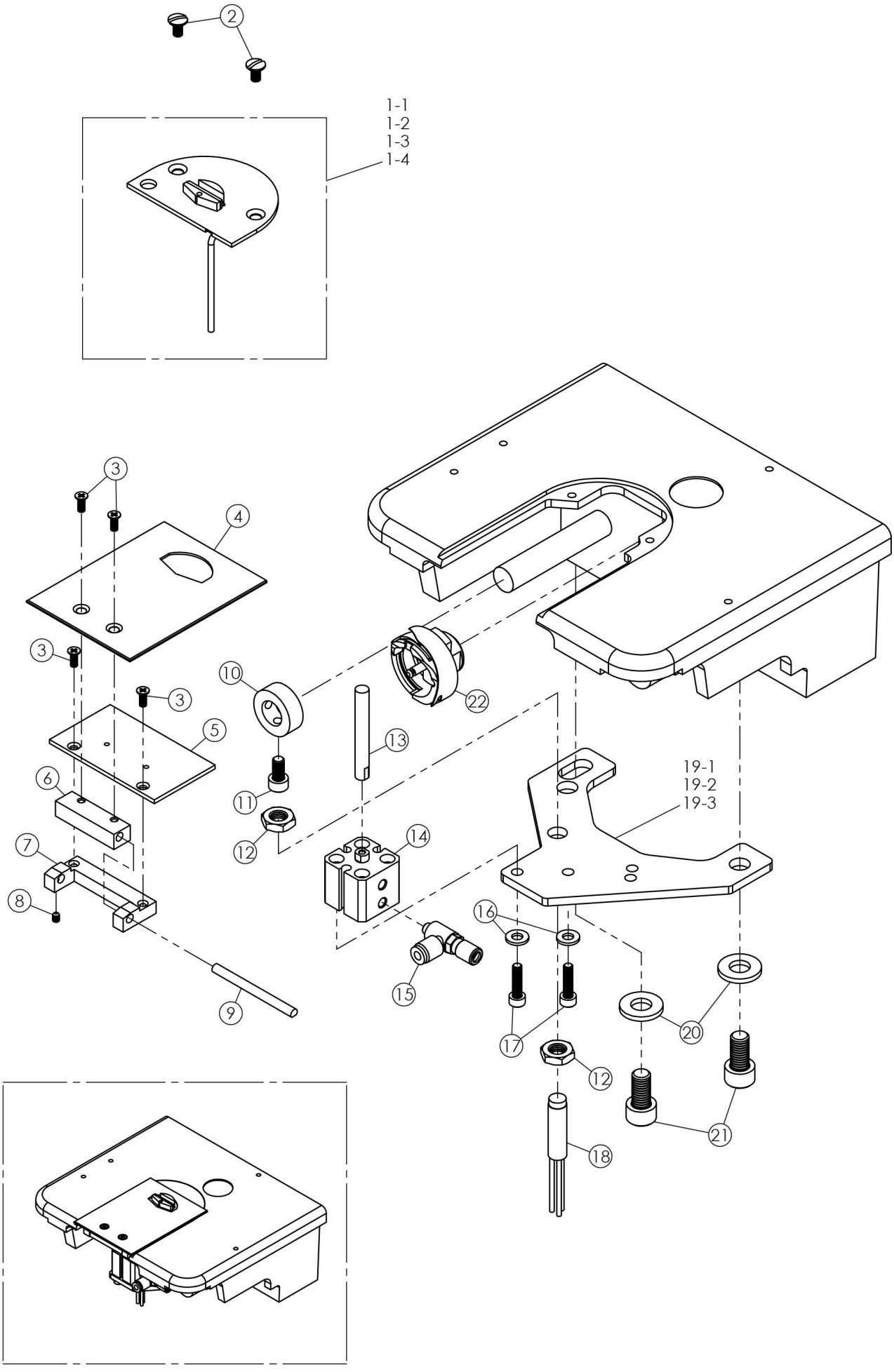
2
1-1
1-2
1-3
1-4
3
4
3
3
5
6
7
8
9
10
11
12
13
14
15
16
17
12
18
19-1
19-2
19-3
20
21
22

| DET | PART NUMBERT | DESCRIPTION |
|---|---|---|
| 1-1 | 11-10083-35-000 | Stich Plate ( 3,5 mm ) |
| 1-2 | 11-10083-40-000 | Stich Plate ( 4 mm ) |
| 1-3 | 11-10083-45-000 | Stich Plate ( 4,5 mm ) |
| 1-4 | 11-10083-50-000 | Stich Plate ( 5 mm ) |
| 2 | 01-90007-00-000 | Screw |
| 3 | 01-61016-03-008 | Screw |
| 4 | 11-10050-00-000 | Plate |
| 5 | 11-10088-00-000 | Slide Plate |
| 6 | 11-10048-00-000 | Block |
| 7 | 11-10049-00-000 | Fixing Block |
| 8 | 01-31002-03-004 | Screw |
| 9 | 13-30007-00-000 | Shaft |
| 10 | 11-10253-00-000 | Coller |
| 11 | 01-11048-05-010 | Screw |
| 12 | 02-91002-08-100 | Nut |
| 13 | 13-30008-00-000 | Shaft |
| 14 | 16-10015-00-200 | Cylinder |
| 15 | 16-40008-05-404 | Speed Controller |
| 16 | 03-11004-04-000 | Washer |
| 17 | 01-11037-04-016 | Screw |
| 18 | 10-50010-00-000 | Metal Sensing Switch |
| 19-1 | 11-10053-00-7200 | Mounting Plate For Brother 7200 |
| 19-2 | 11-10053-00-7250 | Mounting Plate For Brother 7250 |
| 19-3 | 11-10053-00-7300 | Mounting Plate For Brother 7300 |
| 20 | 03-11007-08-000 | Washer |
| 21 | 01-11088-08-016 | Screw |
| 22 | 11-10246-00-003 | Rotary Hook |

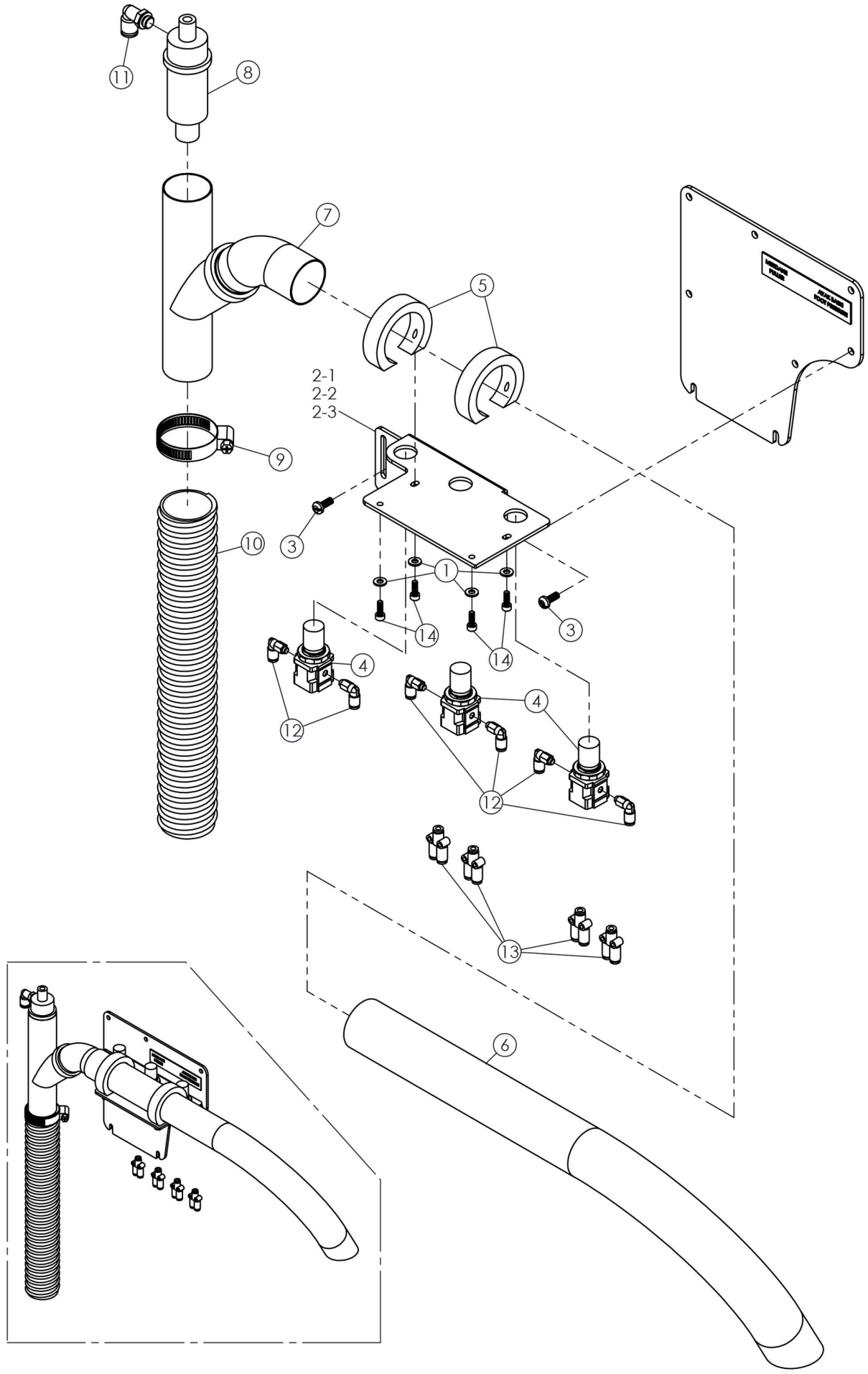
11
8
7
5
2-1
2-2
2-3
9
10
3
1
14
14
3
4
12
4
12
13
6

| DET | PART NUMBERT | DESCRIPTION |
|---|---|---|
| 1 | 03-11004-04-000 | Washer |
| 2-1 | 11-10054-00-7200 | Mounting Plate For Brother 7200 |
| 2-2 | 11-10054-00-7250 | Mounting Plate For Brother 7250 |
| 2-3 | 11-10054-00-7300 | Mounting Plate For Brother 7300 |
| 3 | 01-21046-05-012 | Screw |
| 4 | 16-40002-05-100 | Regulator |
| 5 | 11-10056-00-000 | Pipe Clamp |
| 6 | 11-40005-00-000 | Vacuum Pipe |
| 7 | 16-80001-00-000 | Vacuum Joint |
| 8 | 16-80002-00-000 | Vacuum Air Ejector |
| 9 | 06-70001-00-000 | Pipe Clamp |
| 10 | 15-60002-00-000 | Vacuum Pipe |
| 11 | 16-30005-18-206 | Elbow Joint |
| 12 | 16-30006-05-204 | Elbow Joint |
| 13 | 16-30010-00-404 | Y - Joint |
| 14 | 01-11035-04-012 | Screw |

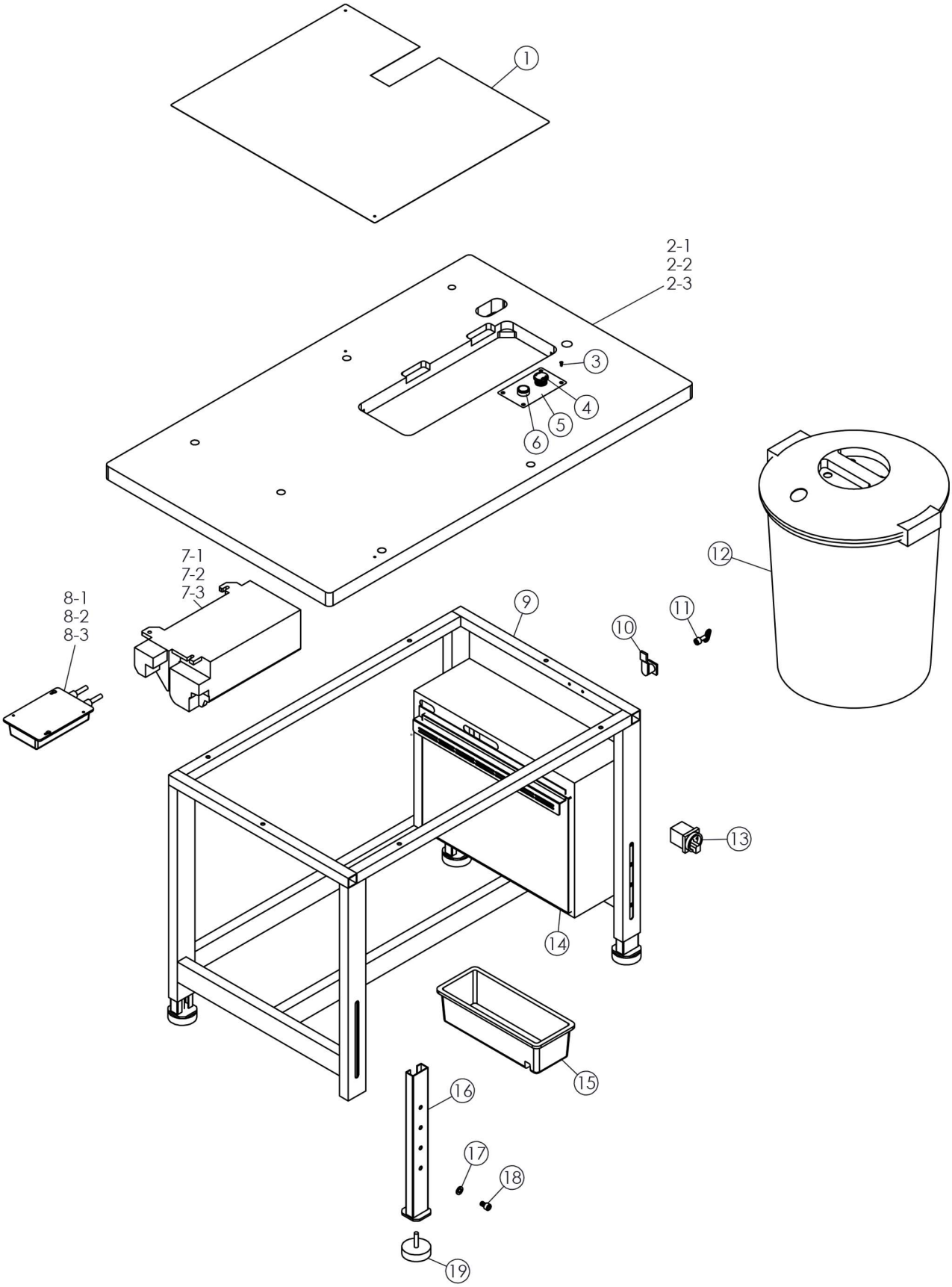
1
2-1
2-2
2-3
3
4
5
6
7-1
7-2
7-3
8-1
8-2
8-3
9
10
11
12
13
14
15
16
17
18
19

| DET | PART NUMBERT | DESCRIPTION |
|---|---|---|
| 1 | 11-10063-00-000 | Slide Plate |
| 2-1 | 15-20001-00-7200 | Table For Brother 7200 |
| 2-2 | 15-20001-00-7250 | Table For Brother 7250 |
| 2-3 | 15-20001-00-7300 | Table For Brother 7300 |
| 3 | 01-90006-04-020 | Screw |
| 4 | 10-30003-00-000 | Stop Switch |
| 5 | 11-10077-00-000 | Switch Support |
| 6 | 10-30004-00-000 | Start Switch |
| 7-1 | 7200-07 | Brother S-7200 Control Box |
| 7-2 | 7250-07 | Brother S-7250 Control Box |
| 7-3 | 7300-07 | Brother S-7300 Control Box |
| 8-1 | 7200-06 | Brother S-7200 Power Board |
| 8-2 | 7250-06 | Brother S-7250 Power Board |
| 8-3 | 7300-06 | Brother S-7300 Power Board |
| 9 | 11-70003-00-000 | Frame |
| 10 | 11-70006-00-000 | Lock |
| 11 | 11-70010-00-000 | Key |
| 12 | 15-60003-00-000 | Box |
| 13 | 10-30001-00-000 | Power Switch |
| 14 | 11-70001-00-000 | Board |
| 15 | 15-60006-00-000 | Tool Box |
| 16 | 11-70004-00-000 | Frame Foot |
| 17 | 03-11008-10-000 | Washer |
| 18 | 01-81094-10-016 | Screw |
| 19 | 15-90001-00-000 | Adjustable Foot |

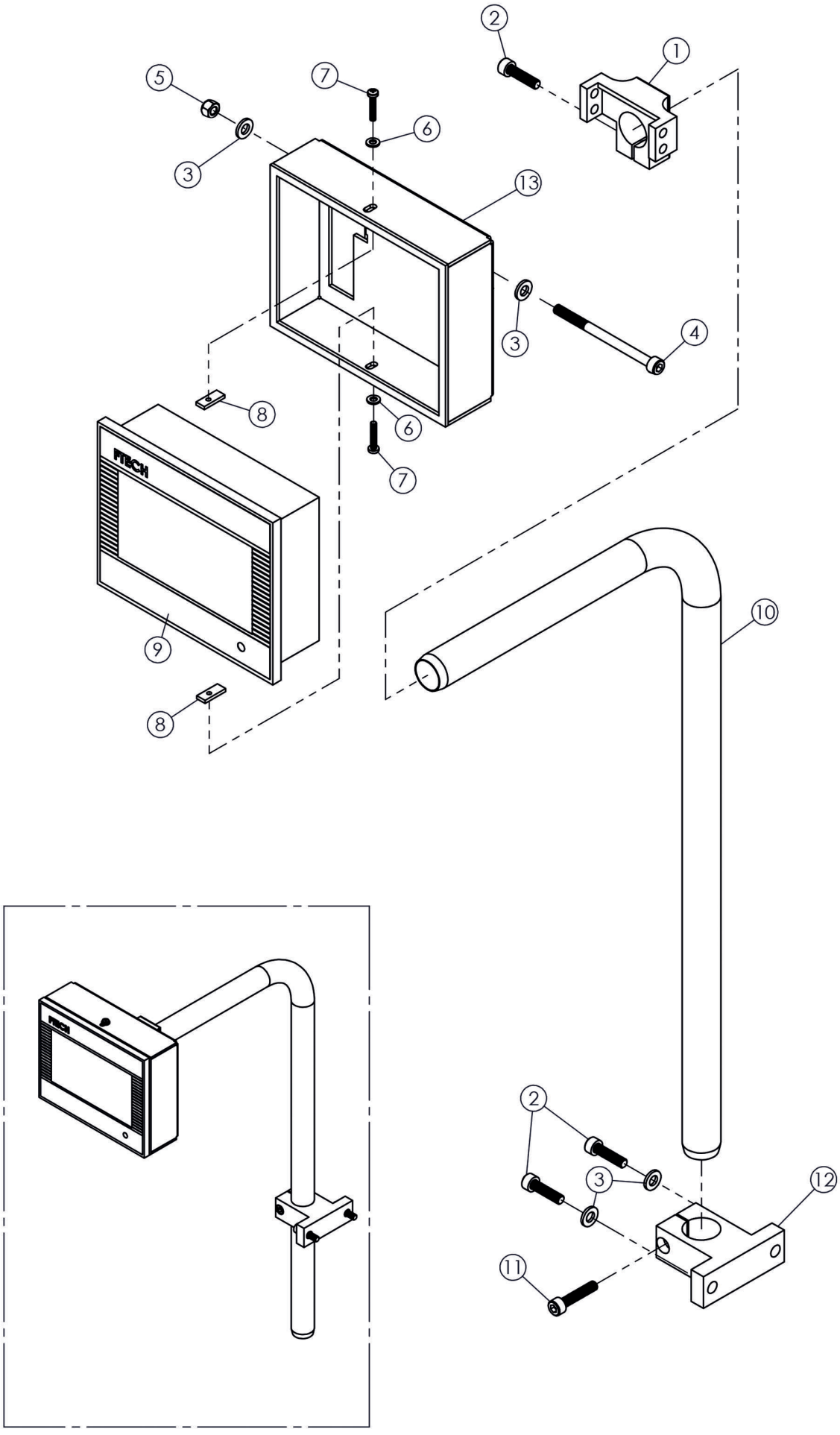
2
1
5
7
6
3
13
3
4
8
6
7
FTECH
9
8
10
2
3
12
11

| DET | PART NUMBERT | DESCRIPTION |
|---|---|---|
| 1 | 11-10369-00-000 | Panel Support |
| 2 | 01-11051-05-020 | Screw |
| 3 | 03-11005-05-000 | Washer |
| 4 | 01-11062-05-070 | Screw |
| 5 | 02-21003-05-000 | Nut |
| 6 | 03-11003-03-000 | Washer |
| 7 | 01-61020-03-016 | Screw |
| 8 | 11-10084-00-000 | Cover Mounting Nut |
| 9 | 10-70001-00-9100 | Panel |
| 10 | 11-40006-00-000 | Panel Support Holder |
| 11 | 11-10370-00-000 | Support |
| 12 | 01-11049-05-025 | Screw |
| 13 | 11-10127-00-000 | Panel Mounting Cover |

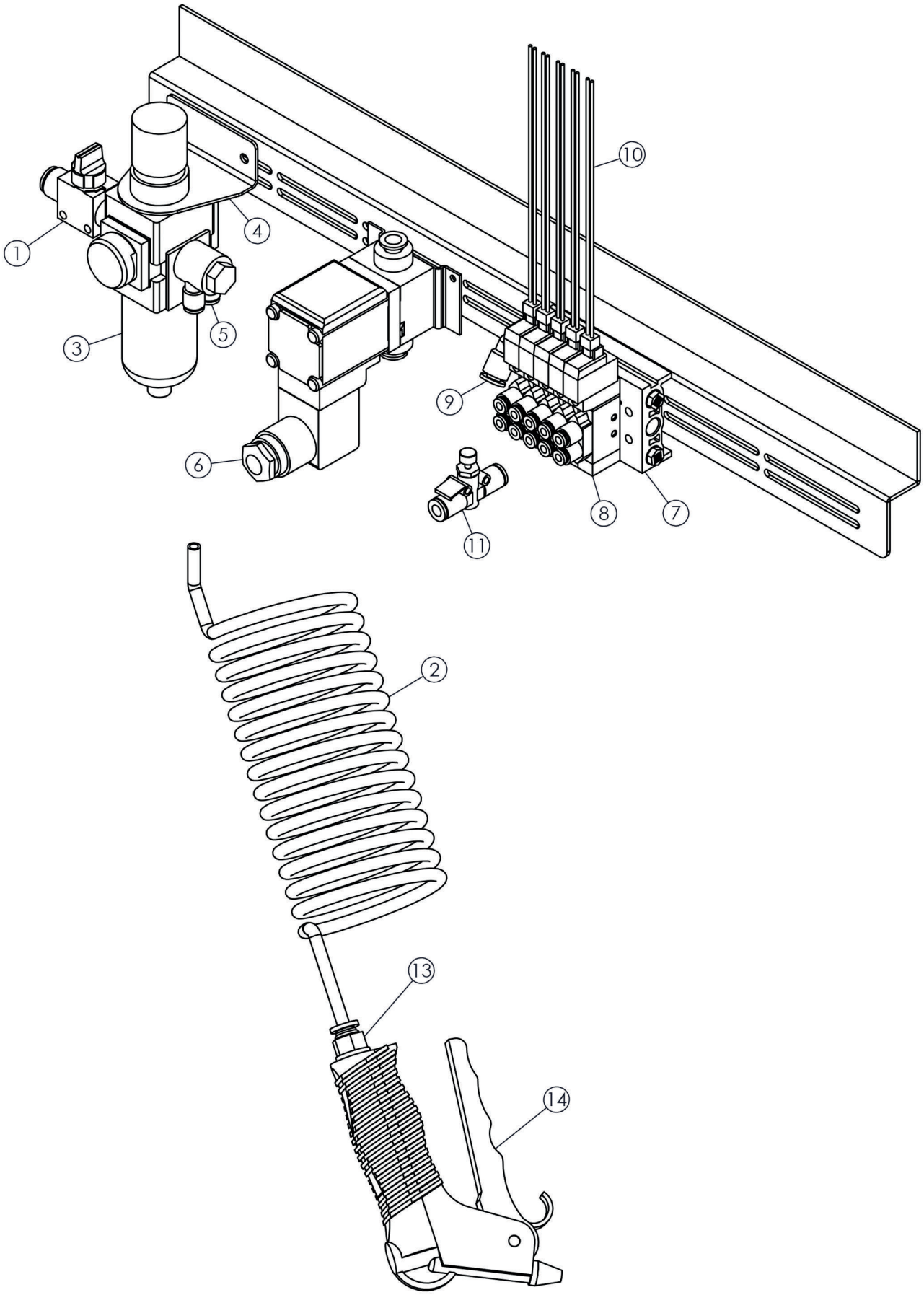
1
2
3
4
5
6
7
8
9
10
11
13
14

| DET | PART NUMBERT | DESCRIPTION |
|---|---|---|
| 1 | 16-60002-14-008 | Air Connector Valve |
| 2 | 16-70008-00-006 | Pressure Guide |
| 3 | 16-40012-14-100 | Regulator |
| 4 | 16-70006-00-006 | Regulator Holder |
| 5 | 16-30003-14-306 | Joint |
| 6 | 16-20002-00-104 | Vacuum Valve |
| 7 | 16-70005-05-005 | Air Valve Plate |
| 8 | 16-20001-00-104 | Valve |
| 9 | 16-30005-18-206 | Elbow Joint |
| 10 | 10-20001-00-000 | Valve Cable |
| 11 | 16-40009-00-304 | Speed Controller |
| 12 | 16-50002-06-505 | Air Gun Tube |
| 13 | 16-30019-14-106 | Joint |
| 14 | 16-60003-14-000 | Air Gun |

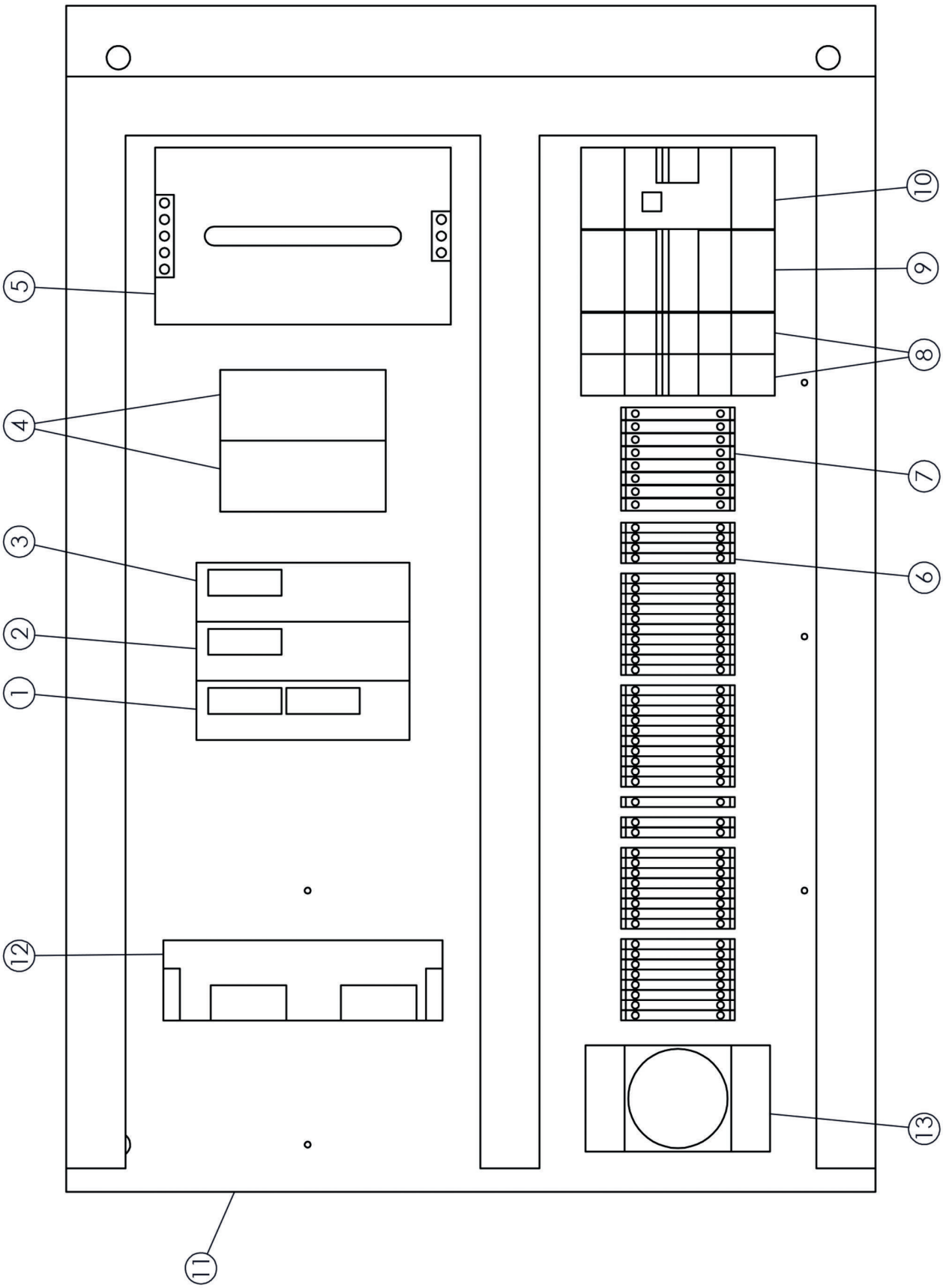
1
2
3
4
5
6
7
8
9
10
11
12
13

| DET | PART NUMBERT | DESCRIPTION |
|---|---|---|
| 1 | 10-40013-00-9100 | Plc |
| 2 | 10-40014-00-000 | Analog Card |
| 3 | 10-40016-00-000 | Out Module |
| 4 | 10-30008-00-000 | Contact Relay |
| 5 | 10-30009-00-000 | Power |
| 6 | 10-10004-00-000 | Terminal |
| 7 | 10-10005-00-000 | Terminal |
| 8 | 10-30012-00-000 | Fuse |
| 9 | 10-30011-00-000 | Fuse |
| 10 | 10-40002-00-000 | Circuit Breaker Relay |
| 11 | 11-70005-00-000 | Plate |
| 12 | 10-40002-00-000 | Step Motor Driver |
| 13 | 10-30007-00-000 | Power Point |

# OPTION PACKAGES

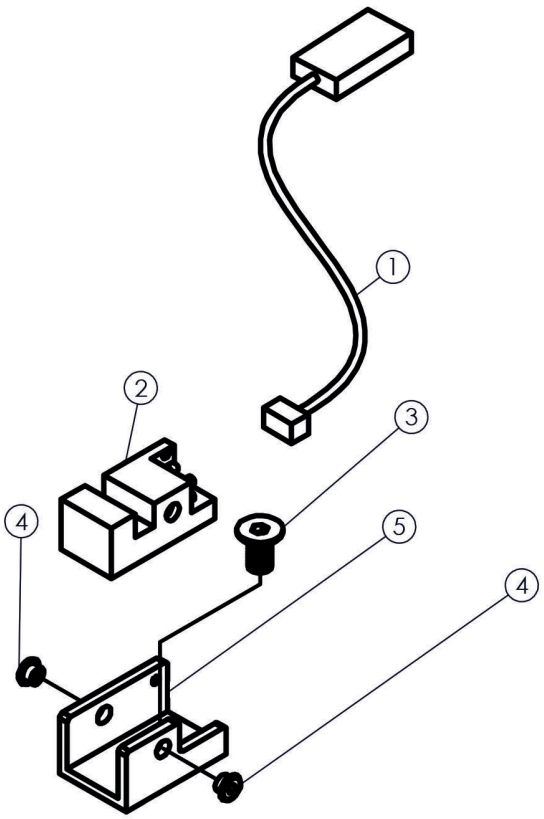

| DET | PART NUMBERT | DESCRIPTION |
|---|---|---|
| 1 | 10-20002-00-000 | Top Thread Monitor Cable |
| 2 | 10-50007-00-000 | Top Thread Monitor |
| 3 | 01-51026-05-010 | Screw |
| 4 | 14-60001-00-000 | Thread Eyelet |
| 5 | 11-10364-00-000 | Top Thread Monitor Support |

| PART NUMBERT | PAGE | DETAIL |
|---|---|---|
| 01-11016-03-008 | 02 | 26 |
| 01-11016-03-008 | 02 | 28 |
| 01-11020-03-016 | 03 | 19 |
| 01-11021-03-020 | 02 | 42 |
| 01-11021-03-020 | 03 | 15 |
| 01-11023-03-025 | 01 | 20 |
| 01-11027-03-040 | 03 | 42 |
| 01-11033-04-008 | 03 | 29 |
| 01-11034-04-010 | 02 | 36 |
| 01-11034-04-010 | 03 | 4 |
| 01-11035-04-012 | 01 | 6 |
| 01-11035-04-012 | 03 | 35 |
| 01-11035-04-012 | 05 | 14 |
| 01-11037-04-016 | 04 | 17 |
| 01-11040-04-025 | 01 | 11 |
| 01-11040-04-025 | 03 | 32 |
| 01-11048-05-010 | 04 | 11 |
| 01-11049-05-012 | 01 | 16 |
| 01-11049-05-025 | 07 | 12 |
| 01-11050-05-016 | 03 | 8 |
| 01-11051-05-020 | 01 | 24 |
| 01-11051-05-020 | 03 | 24 |
| 01-11051-05-020 | 07 | 2 |
| 01-11062-05-070 | 07 | 4 |
| 01-11077-06-055 | 03 | 18 |
| 01-11088-08-016 | 04 | 21 |
| 01-21046-05-012 | 05 | 3 |
| 01-21048-05-010 | 02 | 39 |
| 01-31002-03-004 | 04 | 8 |
| 01-31008-04-004 | 03 | 39 |
| 01-31009-04-006 | 01 | 1 |
| 01-31020-05-006 | 03 | 12 |
| 01-51015-04-010 | 01 | 5 |
| 01-51016-04-012 | 03 | 34 |
| 01-51026-05-010 | 10 | 3 |
| 01-51027-05-012 | 01 | 19 |
| 01-61016-03-008 | 04 | 3 |

| PART NUMBERT | PAGE | DETAIL |
|---|---|---|
| 01-61020-03-016 | 07 | 7 |
| 01-81094-10-016 | 06 | 18 |
| 01-90006-04-020 | 06 | 3 |
| 01-90007-00-000 | 04 | 2 |
| 02-11003-03-000 | 02 | 40 |
| 02-11005-05-000 | 01 | 14 |
| 02-11005-05-000 | 03 | 26 |
| 02-21003-05-000 | 07 | 5 |
| 02-31004-06-000 | 03 | 1 |
| 02-61006-12-000 | 03 | 3 |
| 02-91002-08-100 | 04 | 12 |
| 02-91004-10-125 | 03 | 27 |
| 03-11003-03-000 | 02 | 41 |
| 03-11003-03-000 | 07 | 6 |
| 03-11003-03-000 | 03 | 40 |
| 03-11004-04-000 | 01 | 17 |
| 03-11004-04-000 | 04 | 16 |
| 03-11004-04-000 | 05 | 1 |
| 03-11005-05-000 | 07 | 3 |
| 03-11007-08-000 | 04 | 20 |
| 03-11008-10-000 | 06 | 17 |
| 03-21002-04-012 | 03 | 5 |
| 03-21003-05-015 | 01 | 23 |
| 06-70001-00-000 | 05 | 9 |
| 07-10004-06-019 | 01 | 10 |
| 07-10004-06-019 | 03 | 20 |
| 07-20002-16-022 | 01 | 8 |
| 08-20003-00-000 | 03 | 13 |
| 08-20004-00-000 | 03 | 17 |
| 09-20002-10-260 | 03 | 14 |
| 10-10001-00-000 | 03 | 11 |
| 10-10002-00-000 | 03 | 10 |
| 10-10004-00-000 | 09 | 6 |
| 10-10005-00-000 | 09 | 7 |
| 10-20001-00-000 | 08 | 10 |
| 10-20002-00-000 | 10 | 1 |
| 10-30001-00-000 | 06 | 13 |

| PART NUMBERT | PAGE | DETAIL |
|---|---|---|
| 10-30003-00-000 | 06 | 4 |
| 10-30004-00-000 | 06 | 6 |
| 10-30007-00-000 | 09 | 13 |
| 10-30008-00-000 | 09 | 4 |
| 10-30009-00-000 | 09 | 5 |
| 10-30011-00-000 | 09 | 9 |
| 10-30012-00-000 | 09 | 8 |
| 10-40002-00-000 | 09 | 10 |
| 10-40002-00-000 | 09 | 12 |
| 10-40005-00-000 | 01 | 3 |
| 10-40011-00-000 | 03 | 9 |
| 10-40013-00-9100 | 09 | 1 |
| 10-40014-00-000 | 09 | 2 |
| 10-40016-00-000 | 09 | 3 |
| 10-50005-00-000 | 02 | 44 |
| 10-50007-00-000 | 10 | 2 |
| 10-50010-00-000 | 04 | 18 |
| 10-70001-00-000 | 07 | 9 |
| 10-80002-00-000 | 02 | 43 |
| 11-10029-00-000 | 02 | 29 |
| 11-10047-00-000 | 03 | 28 |
| 11-10048-00-000 | 04 | 6 |
| 11-10049-00-000 | 04 | 7 |
| 11-10050-00-000 | 04 | 4 |
| 11-10051-00-000 | 03 | 7 |
| 11-10052-00-7200 | 01 | 4 |
| 11-10052-00-7250 | 01 | 4 |
| 11-10052-00-7300 | 01 | 4 |
| 11-10053-00-7200 | 04 | 19 |
| 11-10053-00-7250 | 04 | 19 |
| 11-10053-00-7300 | 04 | 19 |
| 11-10054-00-7200 | 05 | 2 |
| 11-10054-00-7250 | 05 | 2 |
| 11-10054-00-7300 | 05 | 2 |
| 11-10055-00-000 | 02 | 45 |
| 11-10056-00-000 | 05 | 5 |
| 11-10057-00-000 | 02 | 32 |
| 11-10059-00-000 | 02 | 34 |
| 11-10061-00-000 | 03 | 6 |

| PART NUMBERT | PAGE | DETAIL |
|---|---|---|
| 11-10062-00-000 | 03 | 36 |
| 11-10063-00-000 | 06 | 1 |
| 11-10064-00-000 | 01 | 18 |
| 11-10065-00-000 | 03 | 16 |
| 11-10066-00-000 | 03 | 23 |
| 11-10067-00-000 | 01 | 12 |
| 11-10077-00-000 | 06 | 5 |
| 11-10082-00-000 | 03 | 41 |
| 11-10083-35-00 | 04 | 1 |
| 11-10083-40-000 | 04 | 1 |
| 11-10083-45-000 | 04 | 1 |
| 11-10083-50-000 | 04 | 1 |
| 11-10084-00-000 | 07 | 8 |
| 11-10088-00-000 | 04 | 5 |
| 11-10093-35-000 | 01 | 25 |
| 11-10093-40-000 | 01 | 25 |
| 11-10093-45-000 | 01 | 25 |
| 11-10093-50-000 | 01 | 25 |
| 11-10110-00-000 | 02 | 37 |
| 11-10127-00-000 | 07 | 13 |
| 11-10246-00-003 | 04 | 22 |
| 11-10253-00-000 | 04 | 10 |
| 11-10364-00-000 | 10 | 5 |
| 11-10366-00-000 | 01 | 2 |
| 11-10367-00-000 | 01 | 7 |
| 11-10368-00-000 | 01 | 9 |
| 11-10369-00-000 | 07 | 1 |
| 11-10370-00-000 | 07 | 11 |
| 11-10372-00-000 | 03 | 25 |
| 11-10375-00-000 | 03 | 37 |
| 11-10376-00-000 | 03 | 38 |
| 11-40005-00-000 | 05 | 6 |
| 11-40006-00-000 | 07 | 10 |
| 11-50001-00-000 | 03 | 2 |
| 11-70001-00-000 | 06 | 14 |
| 11-70003-00-012 | 06 | 9 |
| 11-70004-00-003 | 06 | 16 |
| 11-70005-00-000 | 09 | 11 |
| 11-70006-00-000 | 06 | 10 |
| 11-70010-00-000 | 06 | 11 |

| PART NUMBERT | PAGE | DETAIL |
|---|---|---|
| 13-30007-00-000 | 04 | 9 |
| 13-30008-00-000 | 04 | 13 |
| 13-50001-00-000 | 02 | 31 |
| 135x17 ( DPx17 ) | 02 | 35 |
| 14-50001-00-000 | 02 | 30 |
| 14-60001-00-000 | 10 | 4 |
| 15-20001-00-7200 | 06 | 2 |
| 15-20001-00-7250 | 06 | 2 |
| 15-20001-00-7300 | 06 | 2 |
| 15-30002-00-7200 | 02 | 38 |
| 15-30002-00-7250 | 02 | 38 |
| 15-30002-00-000 | 02 | 38 |
| 15-40005-35-000 | 02 | 27 |
| 15-40005-40-000 | 02 | 27 |
| 15-40005-45-000 | 02 | 27 |
| 15-40005-50-000 | 02 | 27 |
| 15-40011-00-000 | 03 | 20 |
| 15-60002-00-000 | 05 | 10 |
| 15-60003-00-000 | 06 | 12 |
| 15-60006-00-000 | 06 | 15 |
| 15-90001-00-000 | 06 | 19 |
| 16-10005-00-100 | 03 | 31 |
| 16-10006-00-500 | 03 | 33 |
| 16-10007-00-400 | 01 | 22 |
| 16-10013-00-200 | 03 | 21 |
| 16-10015-00-200 | 04 | 14 |
| 16-10016-00-200 | 01 | 13 |
| 16-20001-00-104 | 08 | 8 |
| 16-20002-00-104 | 08 | 6 |
| 16-30003-14-306 | 08 | 5 |

| PART NUMBERT | PAGE | DETAIL |
|---|---|---|
| 16-30005-18-206 | 05 | 11 |
| 16-30005-18-206 | 08 | 9 |
| 16-30006-05-204 | 03 | 22 |
| 16-30006-05-204 | 05 | 12 |
| 16-30008-03-204 | 01 | 21 |
| 16-30010-00-404 | 05 | 13 |
| 16-30019-14-106 | 08 | 13 |
| 16-40002-05-100 | 05 | 4 |
| 16-40007-05-404 | 03 | 30 |
| 16-40008-05-404 | 04 | 15 |
| 16-40009-00-304 | 08 | 11 |
| 16-40012-14-100 | 08 | 3 |
| 16-50002-06-505 | 08 | 12 |
| 16-60002-14-008 | 08 | 1 |
| 16-60003-14-000 | 08 | 14 |
| 16-70005-05-005 | 08 | 7 |
| 16-70006-00-006 | 08 | 4 |
| 16-70008-00-006 | 08 | 2 |
| 16-80001-00-000 | 05 | 7 |
| 16-80002-00-000 | 05 | 8 |
| 17-10003-00-005 | 01 | 15 |
| 18-10001-00-000 | 02 | 33 |
| 18-10002-00-000 | 02 | 33 |
| 7200-06 | 06 | 8-1 |
| 7250-06 | 06 | 8-2 |
| 7300-06 | 06 | 8-3 |
| 7200-07 | 06 | 7-1 |
| 7250-07 | 06 | 7-2 |
| 7300-07 | 06 | 7-3 |

FTECH

Dikiş Otomat Sistemleri

**Orta Mah/ Maltepe Cad. Emintaş Akel İş Merkezi No:10/142 Bayrampaşa / İSTANBUL - TÜRKİYE**
**Tel:+90 212 505 98 91 / 92 - Faks: +90 212 505 98 93 - İnfo@untasmakina.com**