FTECH

Dikiş Otomat Sistemleri

# MODEL FT-7100

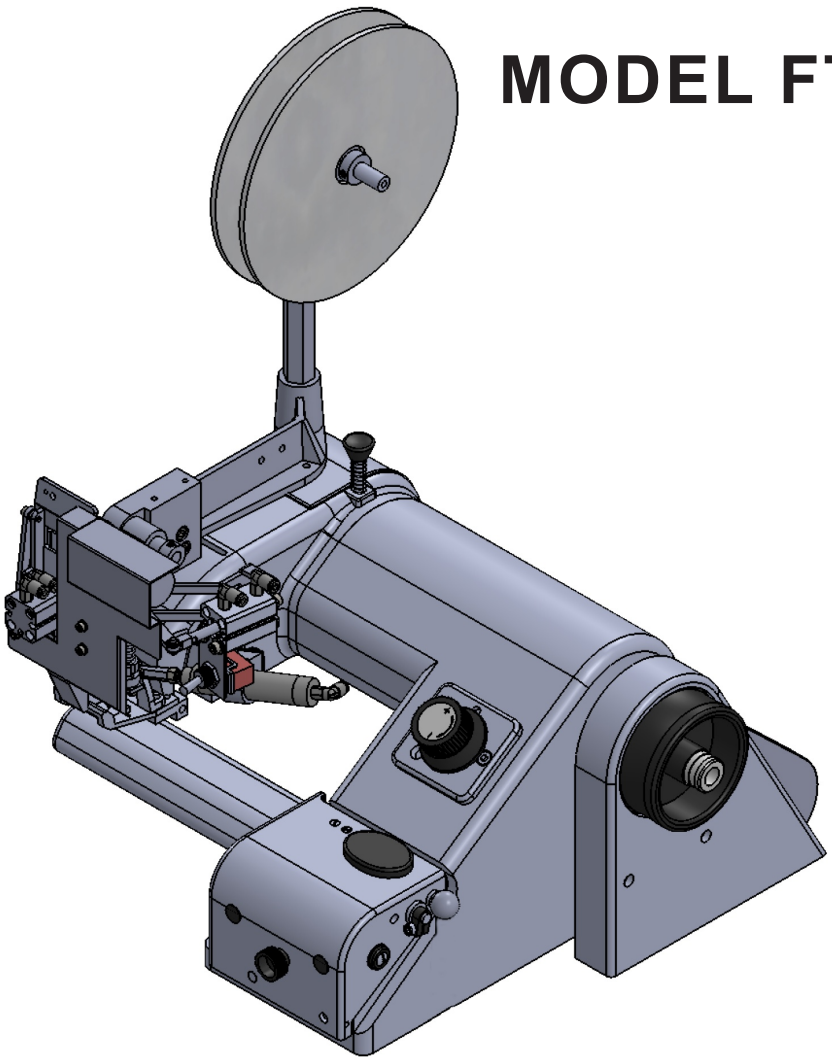

## BLIND STITCH SEWING FOR FUSIBLE COATED TAPE

# PARTS MANUAL

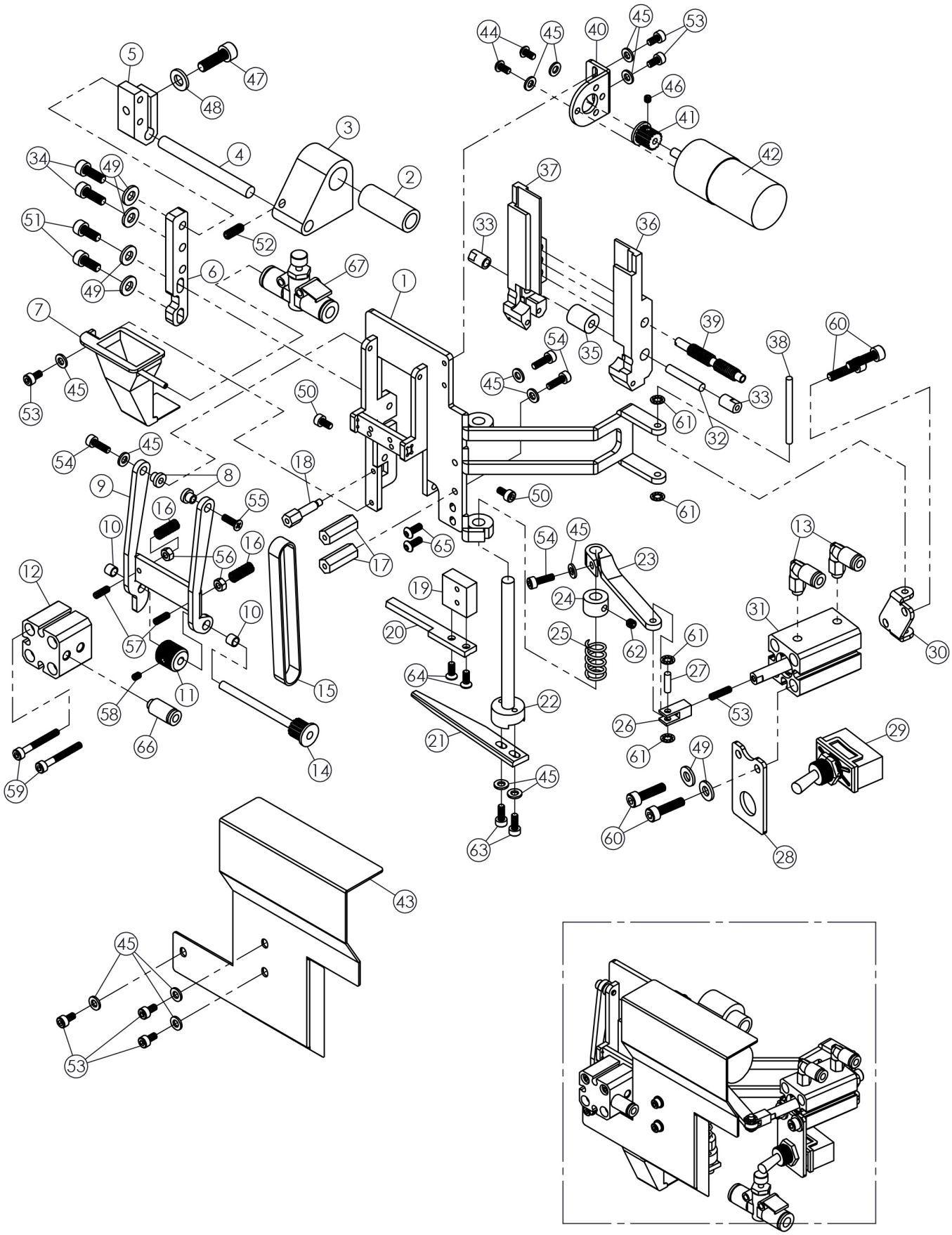

| DET | PART NUMBERT | DESCRIPTION |
|---|---|---|
| 1 | 11-10591-00-002 | Frame |
| 2 | 11-10583-00-000 | Bushing |
| 3 | 11-10582-00-000 | Mount Block |
| 4 | 11-10581-00-000 | Shaft |
| 5 | 11-10580-00-000 | Mount Block |
| 6 | 11-10579-00-000 | Support Plate |
| 7 | 11-10645-00-000 | Tape Guide |
| 8 | 11-10606-00-000 | Bushing |
| 9 | 11-10593-00-000 | Lever |
| 10 | 14-40003-00-000 | Bushing |
| 11 | 11-10600-00-000 | Puller |
| 12 | 16-10039-00-200 | Cylinder |
| 13 | 16-30006-05-204 | Elbow Joint |
| 14 | 11-10610-00-001 | Pulley |
| 15 | 09-60004-07-090 | Belt |
| 16 | 05-20010-00-000 | Spring |
| 17 | 11-10597-00-000 | Specer |
| 18 | 11-10605-00-000 | Specer |
| 19 | 11-10578-00-000 | Knife Holder |
| 20 | 11-10577-00-000 | Fixed Knife |
| 21 | 11-10576-00-000 | Knife |
| 22 | 11-10575-00-002 | Knife Holder |
| 23 | 11-10608-00-000 | Lever |
| 24 | 11-10573-00-000 | Coller |
| 25 | 05-20012-00-000 | Spring |
| 26 | 11-10570-00-000 | Y - Knuck |
| 27 | 11-10571-00-000 | Pin |
| 28 | 11-10609-00-000 | Switch Holder |
| 29 | 10-30007-00-000 | Switch |
| 30 | 11-10572-00-000 | Cylinder Support |
| 31 | 16-10041-00-200 | Cylinder |
| 32 | 11-10602-00-000 | Shaft |
| 33 | 11-10564-00-000 | Shoulder Nut |
| 34 | 01-11035-04-012 | Screw |

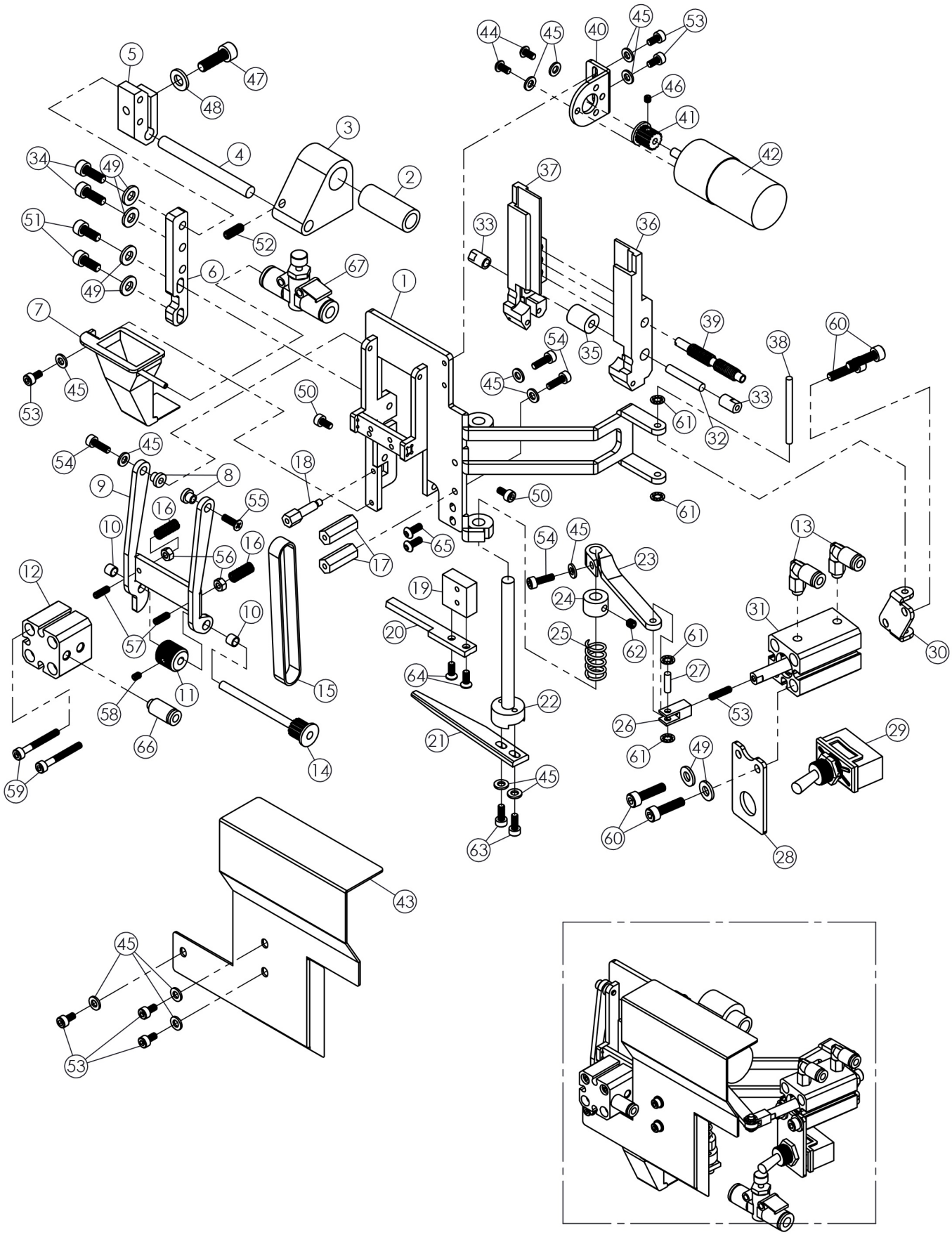

| DET | PART NUMBERT | DESCRIPTION |
|---|---|---|
| 35 | 11-10601-00-000 | Puller |
| 36 | 11-10595-00-000 | Mount Block |
| 37 | 11-10596-00-000 | Mount Block |
| 38 | 11-10629-00-000 | Pin |
| 39 | 11-10598-00-000 | Adjusing Screw |
| 40 | 11-10607-00-000 | Motor Support |
| 41 | 08-80003-00-000 | Pulley |
| 42 | 10-40009-00-000 | DC Motor |
| 43 | 11-10592-00-000 | Cover |
| 44 | 01-41003-03-006 | Screw |
| 45 | 03-11003-03-000 | Washer |
| 46 | 01-31001-03-003 | Screw |
| 47 | 01-11050-05-016 | Screw |
| 48 | 03-11005-05-000 | Washer |
| 49 | 03-11004-04-000 | Washer |
| 50 | 01-11015-03-006 | Screw |
| 51 | 01-11034-04-010 | Screw |
| 52 | 01-31012-04-012 | Screw |
| 53 | 01-11045-03-006 | Screw |
| 54 | 01-11017-03-010 | Screw |
| 55 | 01-51005-03-010 | Screw |
| 56 | 02-11003-03-000 | Nut |
| 57 | 01-31006-03-010 | Screw |
| 58 | 01-31003-03-005 | Screw |
| 59 | 01-11023-03-025 | Screw |
| 60 | 01-11037-04-016 | Screw |
| 61 | 04-50001-03-000 | Retainer |
| 62 | 01-31008-04-005 | Screw |
| 63 | 01-11016-03-008 | Screw |
| 64 | 01-51004-03-008 | Screw |
| 65 | 01-41004-03-008 | Screw |
| 66 | 16-30012-05-104 | Joint |
| 67 | 16-40009-00-304 | Speed Controller |

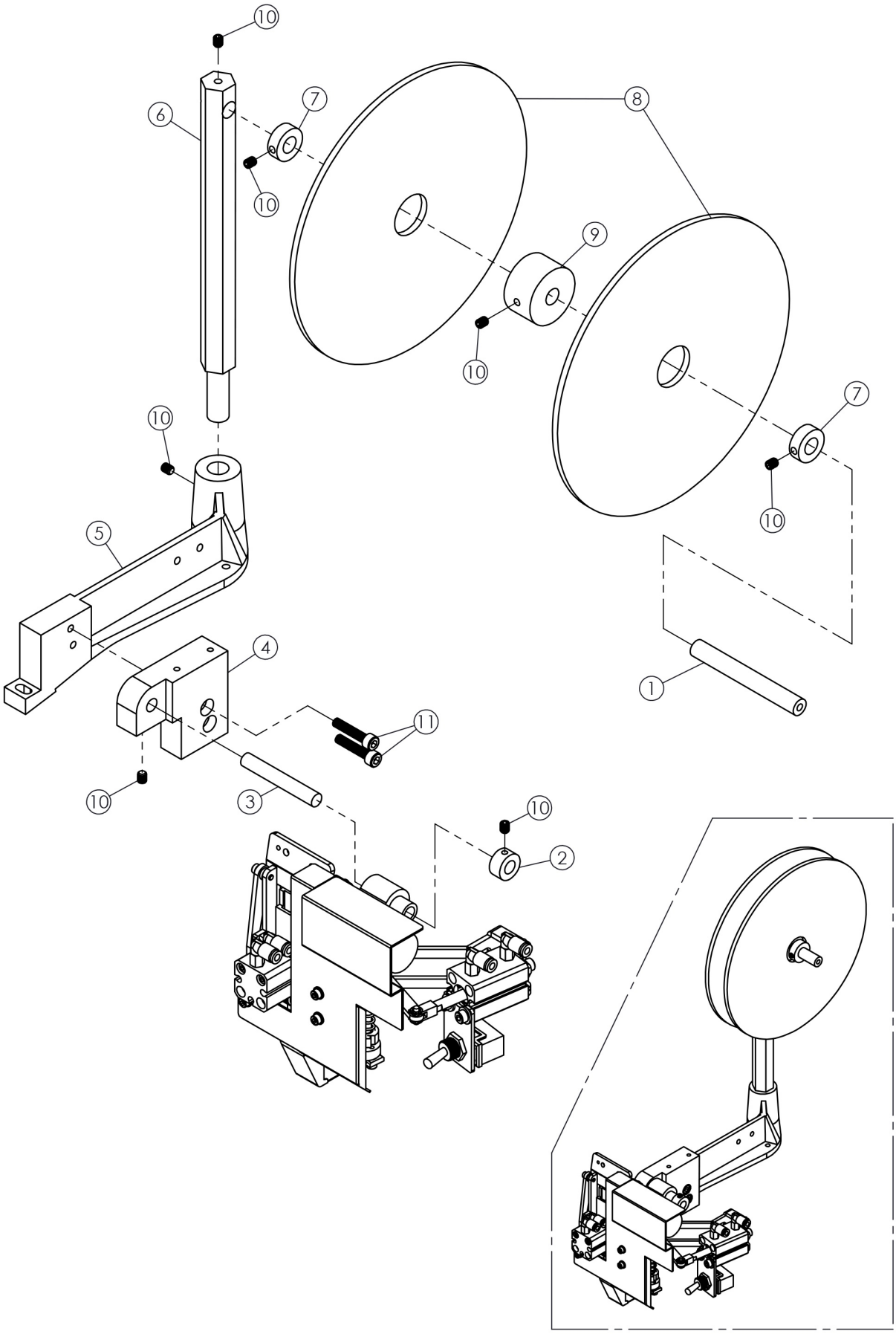
10
6
7
8
10
9
10
7
10
10
5
4
1
11
10
3
10
2

| DET | PART NUMBERT | DESCRIPTION |
|---|---|---|
| 1 | 11-10588-00-000 | Shaft |
| 2 | 11-10584-00-000 | Coller |
| 3 | 11-10585-00-000 | Shaft |
| 4 | 11-10586-00-000 | Mount Block |
| 5 | 11-10628-00-000 | Mount Block |
| 6 | 11-10587-00-000 | Tape Support |
| 7 | 11-10463-00-000 | Coller |
| 8 | 15-30005-00-000 | Tape Cover |
| 9 | 11-10589-00-000 | Coller |
| 10 | 01-31020-05-006 | Screw |
| 11 | 01-11053-05-025 | Screw |

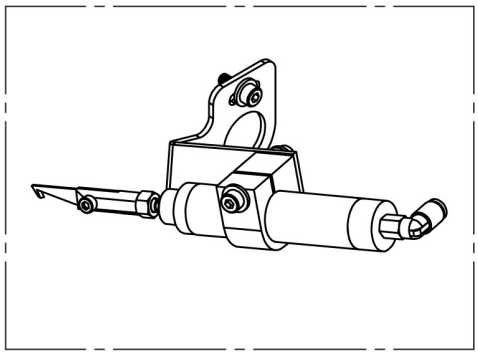

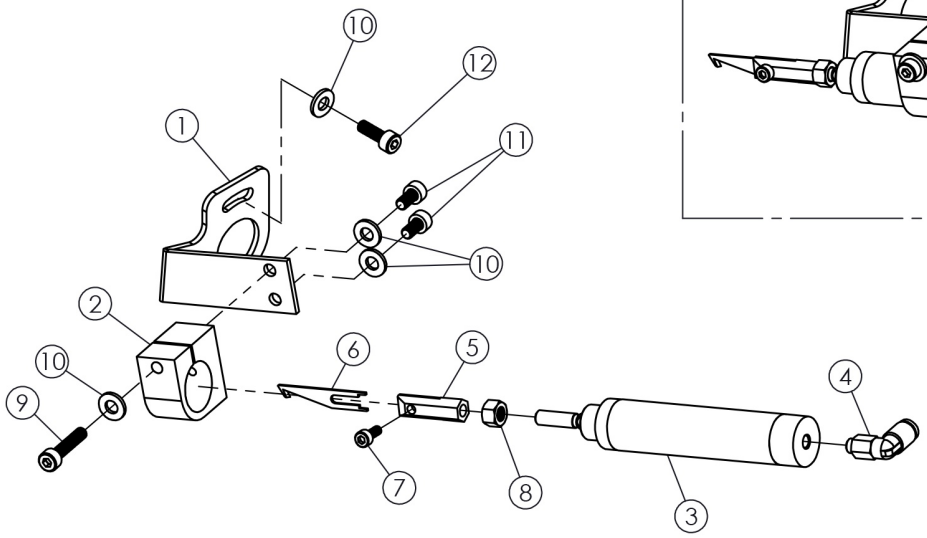
10
12
1
11
10
2
10
9
6
5
4
7
8
3

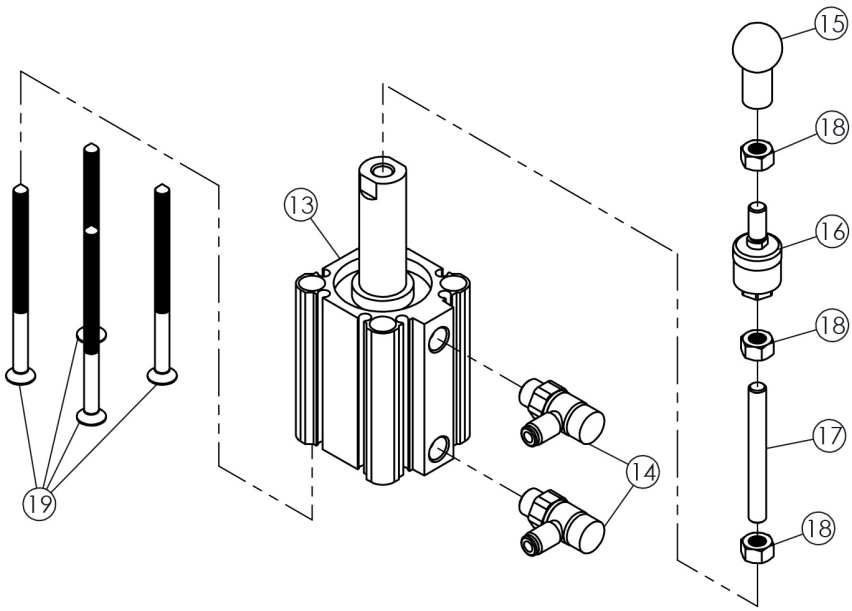
15
18
16
18
17
18
13
14
19

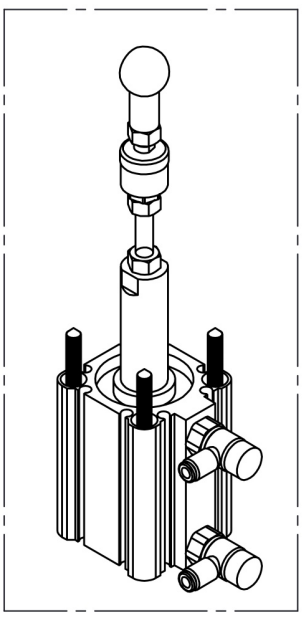

| DET | PART NUMBERT | DESCRIPTION |
|---|---|---|
| 1 | 11-10042-01-000 | Cylinder Support |
| 2 | 11-10695-00-000 | Cylinder Support |
| 3 | 16-10008-00-001 | Cylinder |
| 4 | 16-30006-05-204 | Elbow Joint |
| 5 | 11-10040-00-000 | Knife Holder |
| 6 | 11-10039-00-000 | Knife |
| 7 | 01-11016-03-008 | Screw |
| 8 | 02-11005-05-000 | Nut |
| 9 | 01-11038-04-020 | Screw |
| 10 | 03-11004-04-000 | Washer |
| 11 | 01-11033-04-008 | Screw |
| 12 | 01-11035-04-012 | Screw |
| 13 | 16-10040-00-200 | Cylinder |
| 14 | 16-40004-18-404 | Speed Controller |
| 15 | 17-10009-00-000 | Rod End |
| 16 | 17-10011-06-000 | Universal Joint |
| 17 | 01-82003-06-080 | Screw |
| 18 | 02-11006-06-000 | Nut |
| 19 | 01-21064-05-080 | Screw |

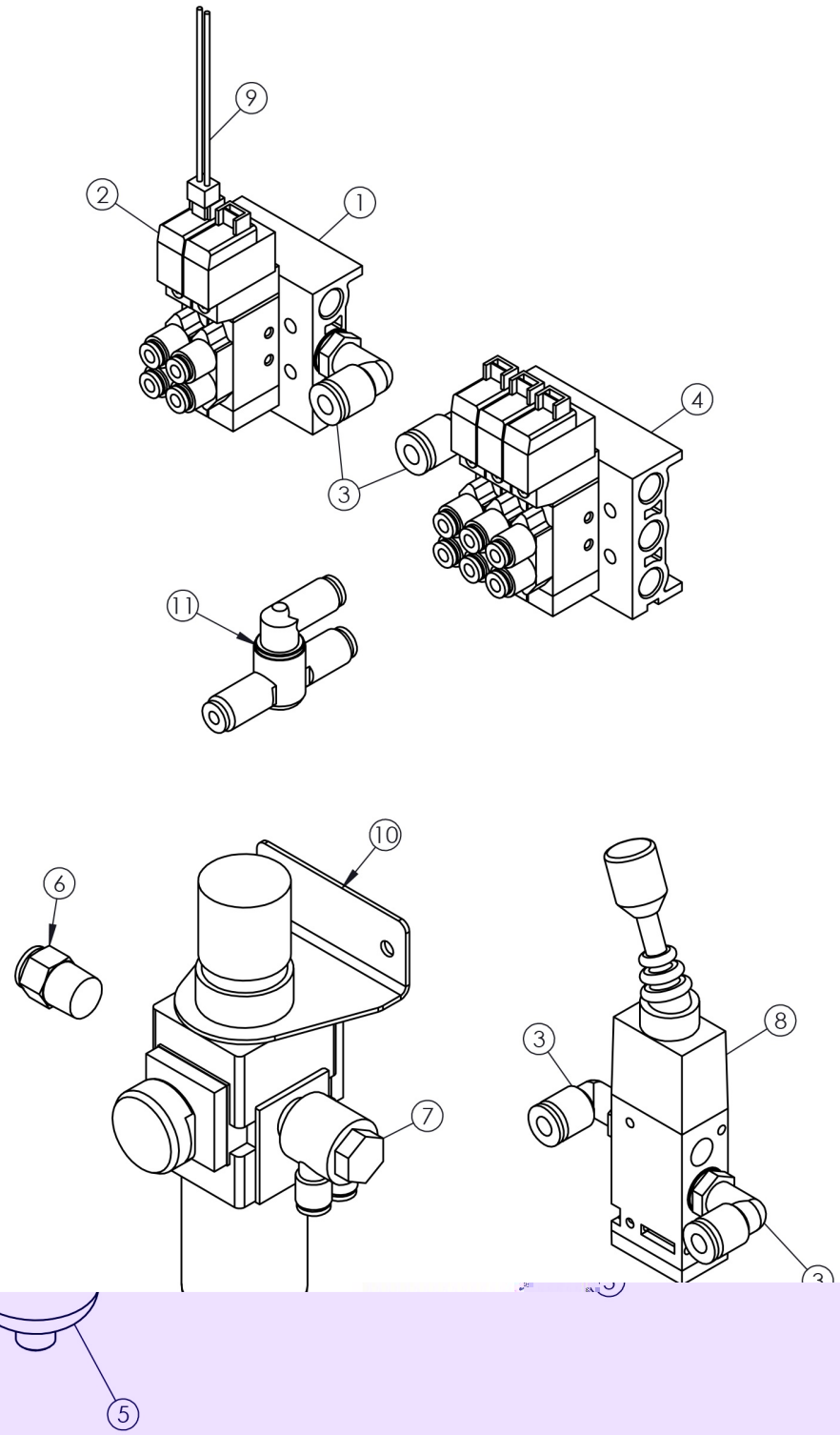
9
2
1
4
3
11
10
6
7
3
8
3
5

| DET | PART NUMBERT | DESCRIPTION |
|---|---|---|
| 1 | 16-70019-05-002 | Air Valve Plate |
| 2 | 16-20001-00-104 | Pneumatic Valve |
| 3 | 16-30005-18-206 | Elbow Joint |
| 4 | 16-70003-05-303 | Air Valve Plate |
| 5 | 16-40012-14-100 | Regulator |
| 6 | 16-30030-14-108 | Air Connector Valve |
| 7 | 16-30003-14-200 | Joint |
| 8 | 16-20004-18-200 | Pneumatic Valve |
| 9 | 10-20001-00-000 | Valve Cable |
| 10 | 16-70006-00-006 | Regulator Holder |
| 11 | 16-20005-04-500 | Valve |

| PART NUMBERT | PAGE | DETAIL |
|---|---|---|
| 01-11015-03-006 | 02 | 50 |
| 01-11016-03-008 | 02 | 63 |
| 01-11016-03-008 | 04 | 7 |
| 01-11017-03-010 | 02 | 54 |
| 01-11023-03-025 | 02 | 59 |
| 01-11033-04-008 | 04 | 11 |
| 01-11034-04-010 | 02 | 51 |
| 01-11035-04-012 | 01 | 34 |
| 01-11035-04-012 | 04 | 12 |
| 01-11037-04-016 | 02 | 60 |
| 01-11038-04-020 | 04 | 9 |
| 01-11045-03-006 | 02 | 53 |
| 01-11050-05-016 | 02 | 47 |
| 01-11053-05-025 | 03 | 11 |
| 01-21064-05-080 | 04 | 19 |
| 01-31001-03-003 | 02 | 46 |
| 01-31003-03-005 | 02 | 58 |
| 01-31006-03-010 | 02 | 57 |
| 01-31008-04-005 | 02 | 62 |
| 01-31012-04-012 | 02 | 52 |
| 01-31020-05-006 | 03 | 10 |
| 01-41003-03-006 | 02 | 44 |
| 01-41004-03-008 | 02 | 65 |
| 01-51004-03-008 | 02 | 64 |
| 01-51005-03-010 | 02 | 55 |
| 01-82003-06-080 | 04 | 17 |
| 02-11003-03-000 | 02 | 56 |
| 02-11005-05-000 | 04 | 8 |
| 02-11006-06-000 | 04 | 18 |
| 03-11003-03-000 | 02 | 45 |

| PART NUMBERT | PAGE | DETAIL |
|---|---|---|
| 03-11004-04-000 | 02 | 49 |
| 03-11004-04-000 | 04 | 10 |
| 03-11005-05-000 | 02 | 48 |
| 04-50001-03-000 | 02 | 61 |
| 05-20010-00-000 | 01 | 16 |
| 05-20012-00-000 | 01 | 25 |
| 08-80003-00-000 | 02 | 41 |
| 09-60004-07-090 | 01 | 15 |
| 10-20001-00-000 | 05 | 9 |
| 10-30007-00-000 | 01 | 29 |
| 10-40009-00-000 | 02 | 42 |
| 11-10039-00-000 | 04 | 6 |
| 11-10040-00-000 | 04 | 5 |
| 11-10042-01-000 | 04 | 1 |
| 11-10463-00-000 | 03 | 7 |
| 11-10564-00-000 | 01 | 33 |
| 11-10570-00-000 | 01 | 26 |
| 11-10571-00-000 | 01 | 27 |
| 11-10572-00-000 | 01 | 30 |
| 11-10573-00-000 | 01 | 24 |
| 11-10575-00-002 | 01 | 22 |
| 11-10576-00-000 | 01 | 21 |
| 11-10577-00-000 | 01 | 20 |
| 11-10578-00-000 | 01 | 19 |
| 11-10579-00-000 | 01 | 6 |
| 11-10580-00-000 | 01 | 5 |
| 11-10581-00-000 | 01 | 4 |
| 11-10582-00-000 | 01 | 3 |
| 11-10583-00-000 | 01 | 2 |
| 11-10584-00-000 | 03 | 2 |

| PART NUMBERT | PAGE | DETAIL |
|---|---|---|
| 11-10585-00-000 | 03 | 3 |
| 11-10586-00-000 | 03 | 4 |
| 11-10587-00-000 | 03 | 6 |
| 11-10588-00-000 | 03 | 1 |
| 11-10589-00-000 | 03 | 9 |
| 11-10591-00-002 | 01 | 1 |
| 11-10592-00-000 | 02 | 43 |
| 11-10593-00-000 | 01 | 9 |
| 11-10595-00-000 | 02 | 36 |
| 11-10596-00-000 | 02 | 37 |
| 11-10597-00-000 | 01 | 17 |
| 11-10598-00-000 | 02 | 39 |
| 11-10600-00-000 | 01 | 11 |
| 11-10601-00-000 | 02 | 35 |
| 11-10602-00-000 | 01 | 32 |
| 11-10605-00-000 | 01 | 18 |
| 11-10606-00-000 | 01 | 8 |
| 11-10607-00-000 | 02 | 40 |
| 11-10608-00-000 | 01 | 23 |
| 11-10609-00-000 | 01 | 28 |
| 11-10610-00-001 | 01 | 14 |
| 11-10628-00-000 | 03 | 5 |
| 11-10629-00-000 | 02 | 38 |
| 11-10645-00-000 | 01 | 7 |
| 11-10695-00-000 | 04 | 2 |
| 14-40003-00-000 | 01 | 10 |
| 15-30005-00-000 | 03 | 8 |
| 16-10008-00-001 | 04 | 3 |
| 16-10039-00-001 | 01 | 12 |
| 16-10040-00-200 | 04 | 13 |

| PART NUMBERT | PAGE | DETAIL |
|---|---|---|
| 16-10041-00-200 | 01 | 31 |
| 16-20001-00-104 | 05 | 2 |
| 16-20004-18-200 | 05 | 8 |
| 16-20005-04-500 | 05 | 11 |
| 16-30003-14-200 | 05 | 7 |
| 16-30005-18-206 | 05 | 3 |
| 16-30006-05-204 | 01 | 13 |
| 16-30006-05-204 | 04 | 4 |
| 16-30012-05-104 | 02 | 66 |
| 16-30030-14-108 | 05 | 6 |
| 16-40004-18-404 | 04 | 14 |
| 16-40009-00-304 | 02 | 67 |
| 16-40012-14-100 | 05 | 5 |
| 16-70003-05-303 | 05 | 4 |
| 16-70006-00-006 | 05 | 10 |
| 16-70019-05-002 | 05 | 1 |
| 17-10009-00-000 | 04 | 15 |
| 17-10011-06-000 | 04 | 16 |

FTECH

Dikiş Otomat Sistemleri

**Orta Mah/ Maltepe Cad. Emintaş Akel İş Merkezi No:10/142 Bayrampaşa / İSTANBUL - TÜRKİYE**
**Tel:+90 212 505 98 91 / 92 - Faks: +90 212 505 98 93 - İnfo@untasmakina.com**