FTECH

Dikiş Otomat Sistemleri

MODEL FT-9200B

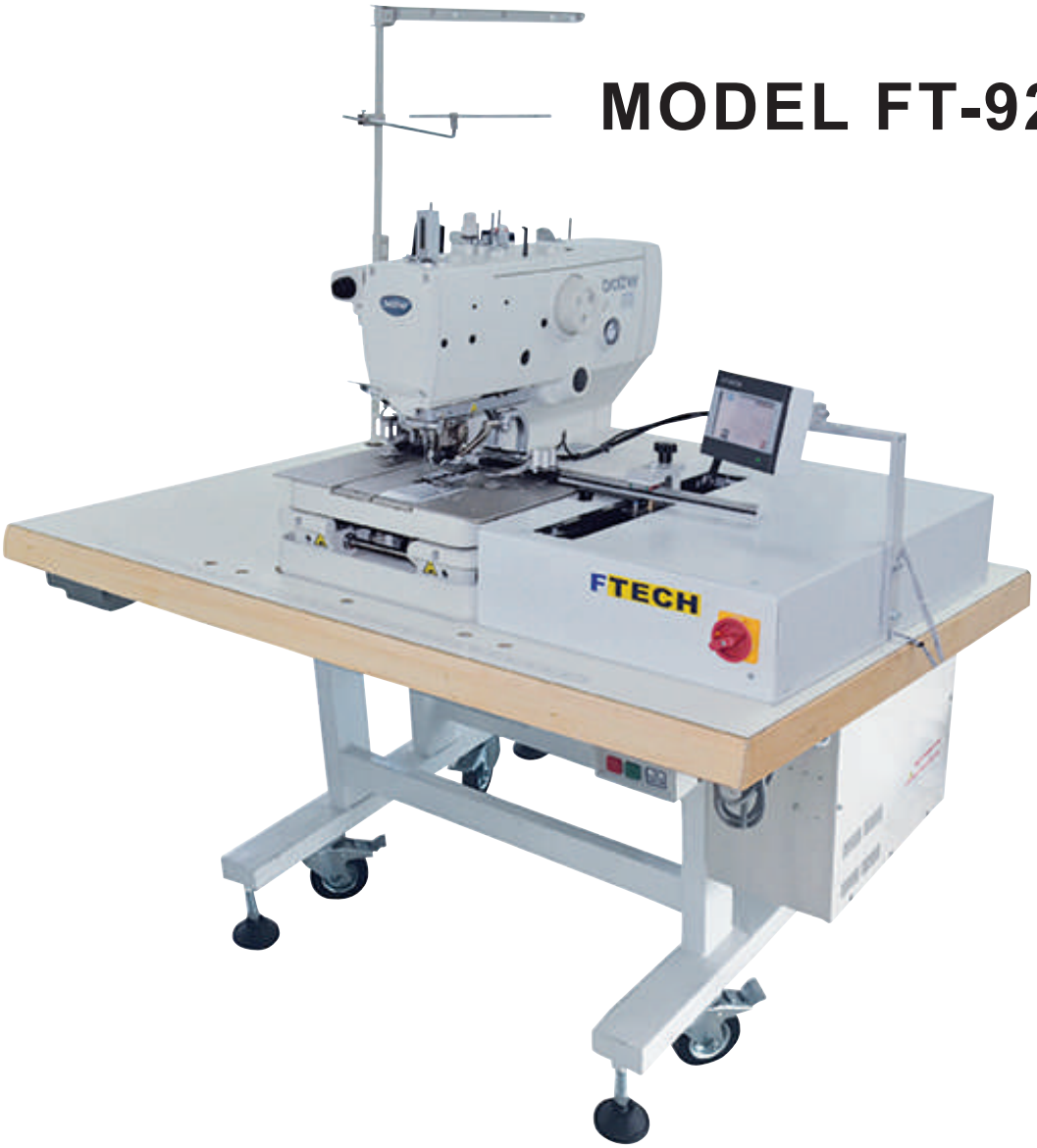

EYELET BUTTONHOLE INDEXER

PARTS MANUAL

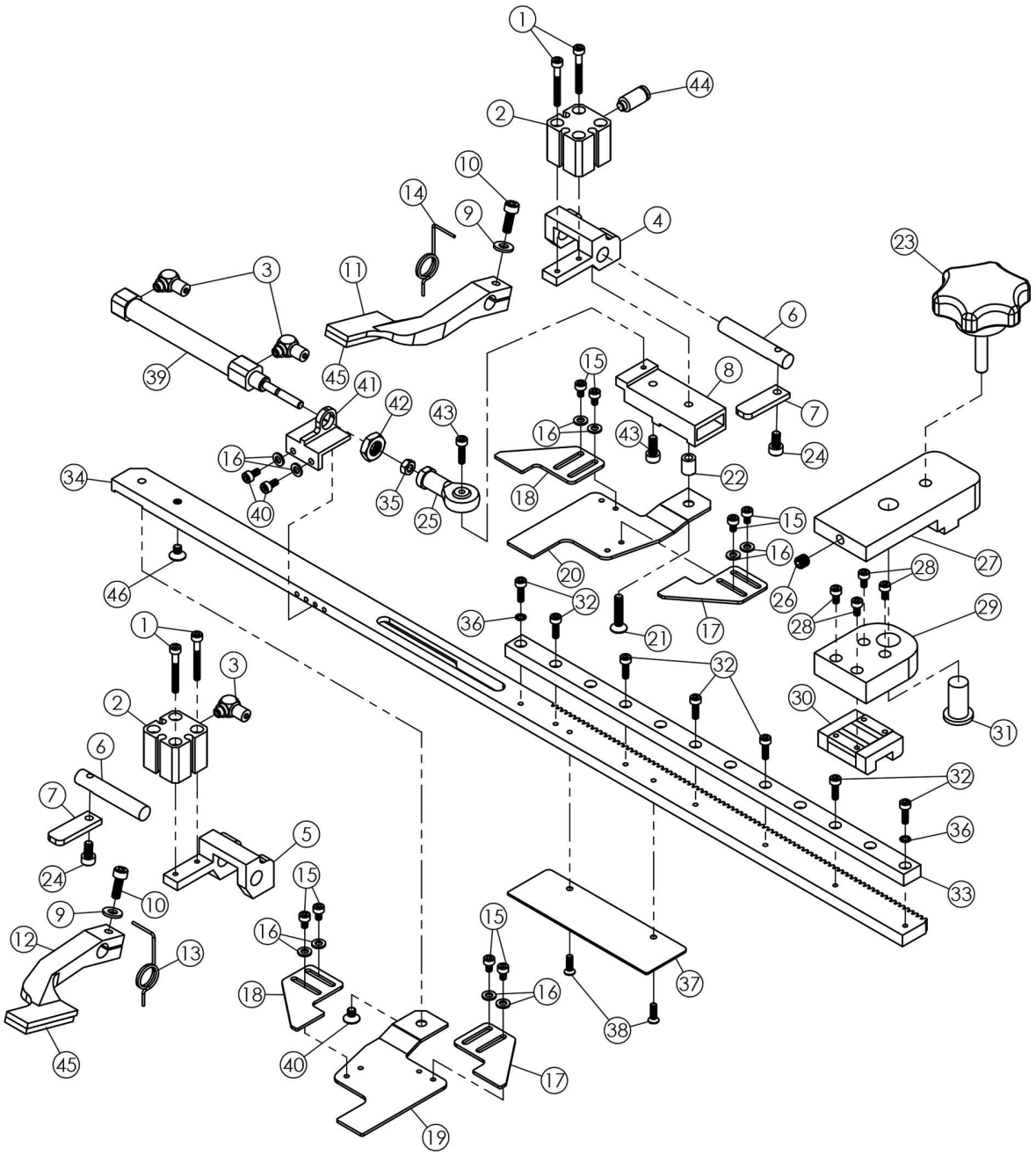

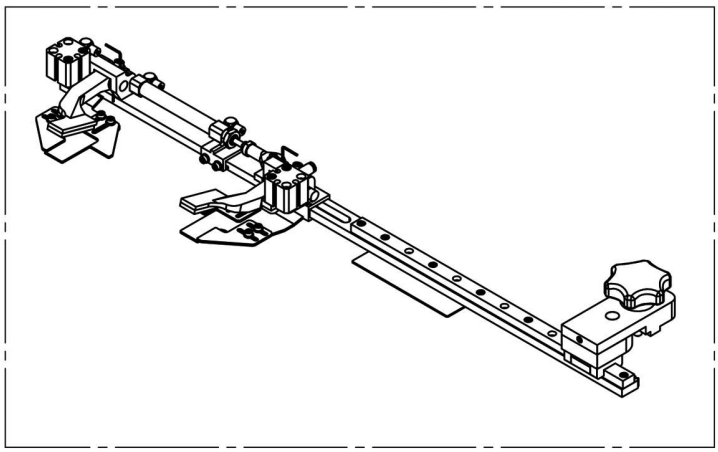

DET	PART NUMBERT	DESCRIPTION
1	01-11023-03-025	Screw
2	16-10039-00-200	Cylinder
3	16-30020-05-204	Elbow Joint
4	11-10727-00-000	Clamp Arm Holder
5	11-10726-00-000	Clamp Arm Holder
6	11-10300-00-000	Shaft
7	11-10286-00-000	Push Plate
8	11-10299-00-000	Slide Block
9	03-11004-04-000	Washer
10	01-11035-04-012	Screw
11	11-10728-00-000	Clamp Arm
12	11-10731-00-000	Clamp Arm
13	05-20007-00-000	Spring
14	05-20008-00-000	Spring
15	01-11014-03-005	Screw
16	03-11003-03-000	Washer
17	11-10294-00-000	Guiding Plate
18	11-10295-00-000	Guiding Plate
19	11-10297-00-000	Clamp Mat
20	11-10296-00-000	Clamp Mat
21	01-51019-04-020	Screw
22	11-10388-00-000	Bushing
23	01-90002-06-025	Screw

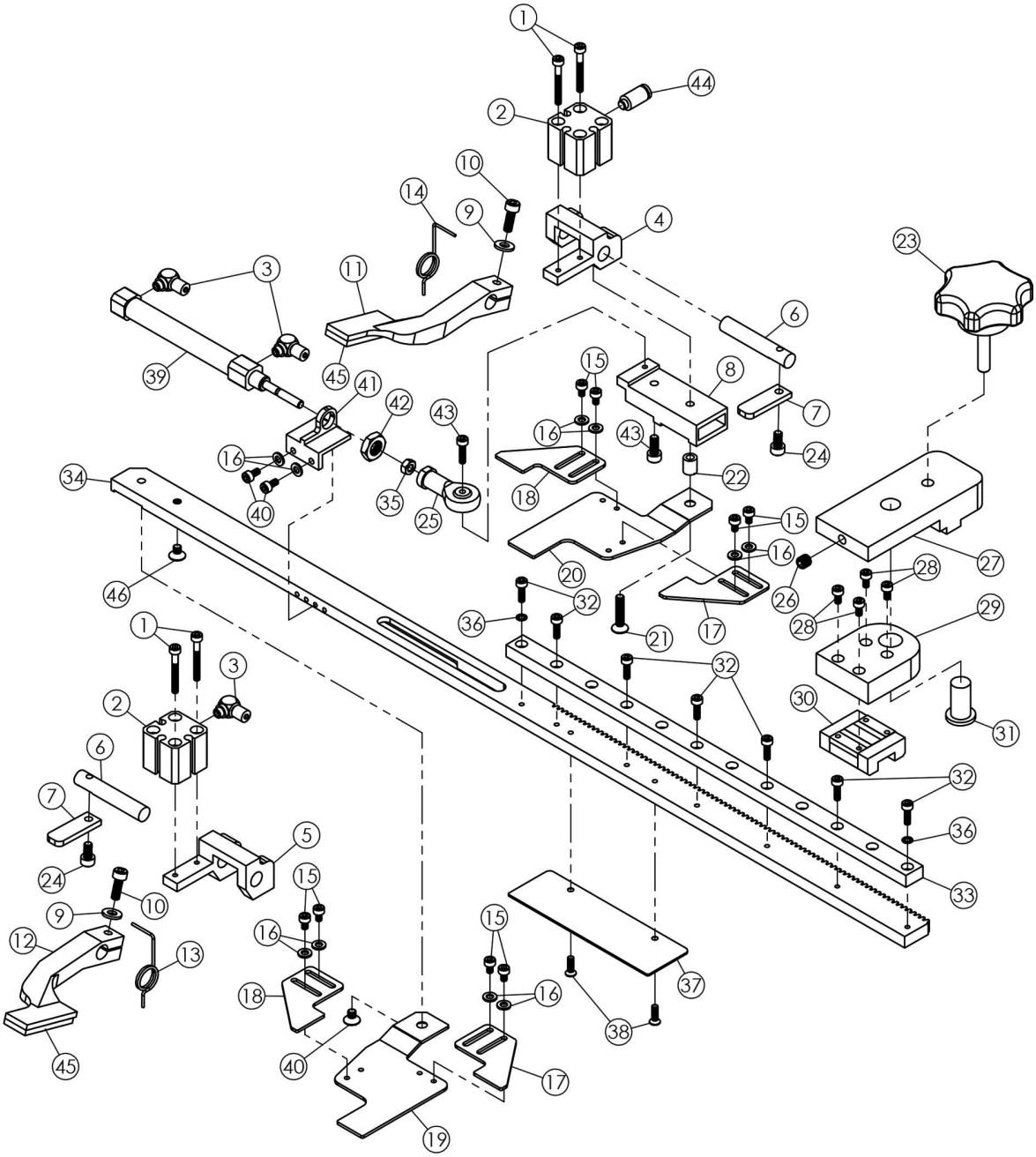
1
44
2
10
14
9
4
23
3
11
6
39
45
41
15
8
42
43
7
16
43
24
16
22
34
35
18
40
25
15
16
27
20
28
46
32
26
36
21
17
28
29
1
32
3
30
2
31
6
32
7
5
36
24
15
33
10
9
16
15
12
13
37
18
16
38
45
40
17
19

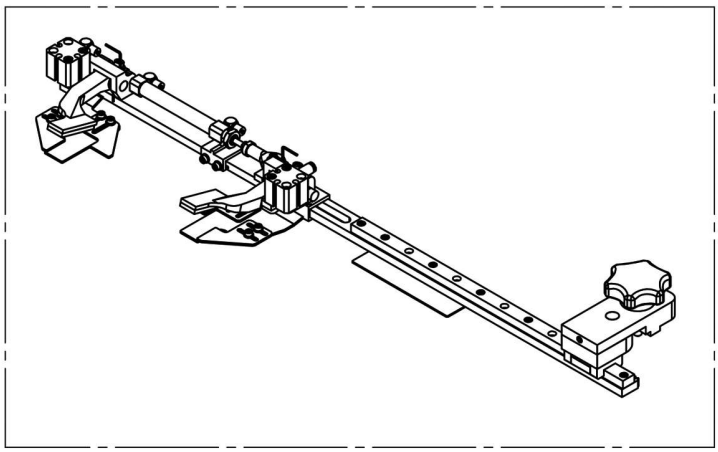

DET	PART NUMBERT	DESCRIPTION
24	01-11033-04-008	Screw
25	17-10006-04-000	Rod End
26	01-31036-06-006	Screw
27	11-10724-00-000	Mouting Clamp
28	01-11015-03-006	Screw
29	11-10729-00-000	Mouting Bracket
30	20-20002-01-000	Linear Guideway
31	11-10730-00-000	Shoulder Stud
32	01-11017-03-010	Screw
33	20-10002-01-000	Linear Rail
34	11-10611-00-000	Clamp Rail
35	02-11004-04-000	Nut
36	04-50001-03-000	Retainer
37	11-10301-00-000	Sensing Plate
38	01-51005-03-010	Screw
39	16-10026-00-100	Cylinder
40	01-51013-04-006	Screw
41	11-10827-00-000	Cylinder Support
42	02-91008-08-125	Nut
43	01-11018-03-012	Screw
44	16-30012-05-104	Joint
45	15-80003-00-000	Clamp Rubber
46	01-51013-04-006	Screw

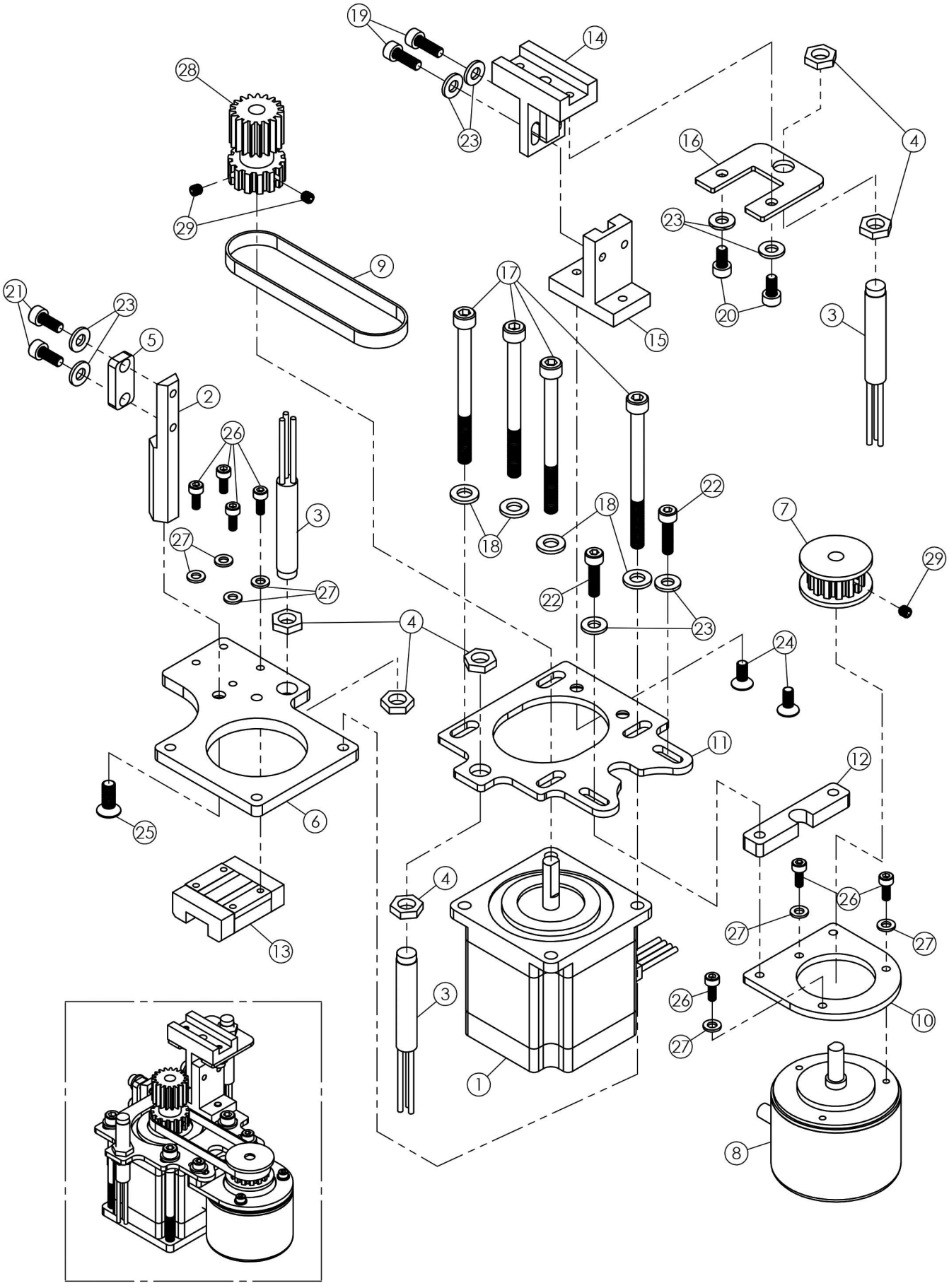
19
14
28
23
16
4
29
23
9
17
21
23
5
20
3
15
2
26
22
18
7
3
18
29
27
27
22
4
23
24
11
12
25
6
4
26
27
27
13
3
26
10
27
1
8

DET	PART NUMBERT	DESCRIPTION
1	10-40001-00-000	Steping Motor
2	11-10302-00-000	Belt Holder
3	10-50009-00-000	Sensing Switch
4	02-91001-08-000	Nut
5	11-10213-00-000	Belt Clamp
6	11-10826-00-000	Mouting Block
7	08-50006-00-000	Pulley
8	10-40020-00-000	Encoder
9	09-60003-10-080	Belt
10	11-10376-00-000	Encoder Mouting Plate
11	11-10075-00-000	Encoder Mouting Plate
12	11-10095-00-000	Spacer
13	20-20002-01-000	Linear Guideway
14	11-10717-00-000	Mouting Clamp
15	11-10718-00-000	Mouting Bracket
16	11-10834-00-000	Sensing Plate
17	01-11061-05-065	Screw
18	03-11005-05-000	Washer
19	01-11035-04-012	Screw
20	01-11033-04-008	Screw
21	01-11034-04-010	Screw
22	01-11037-04-016	Screw
23	03-11004-04-000	Washer
24	01-51015-04-010	Screw
25	01-51028-05-016	Screw
26	01-11016-03-008	Screw
27	03-11003-03-000	Washer
28	11-10736-00-000	Sub Pulley
29	01-31008-04-004	Screw

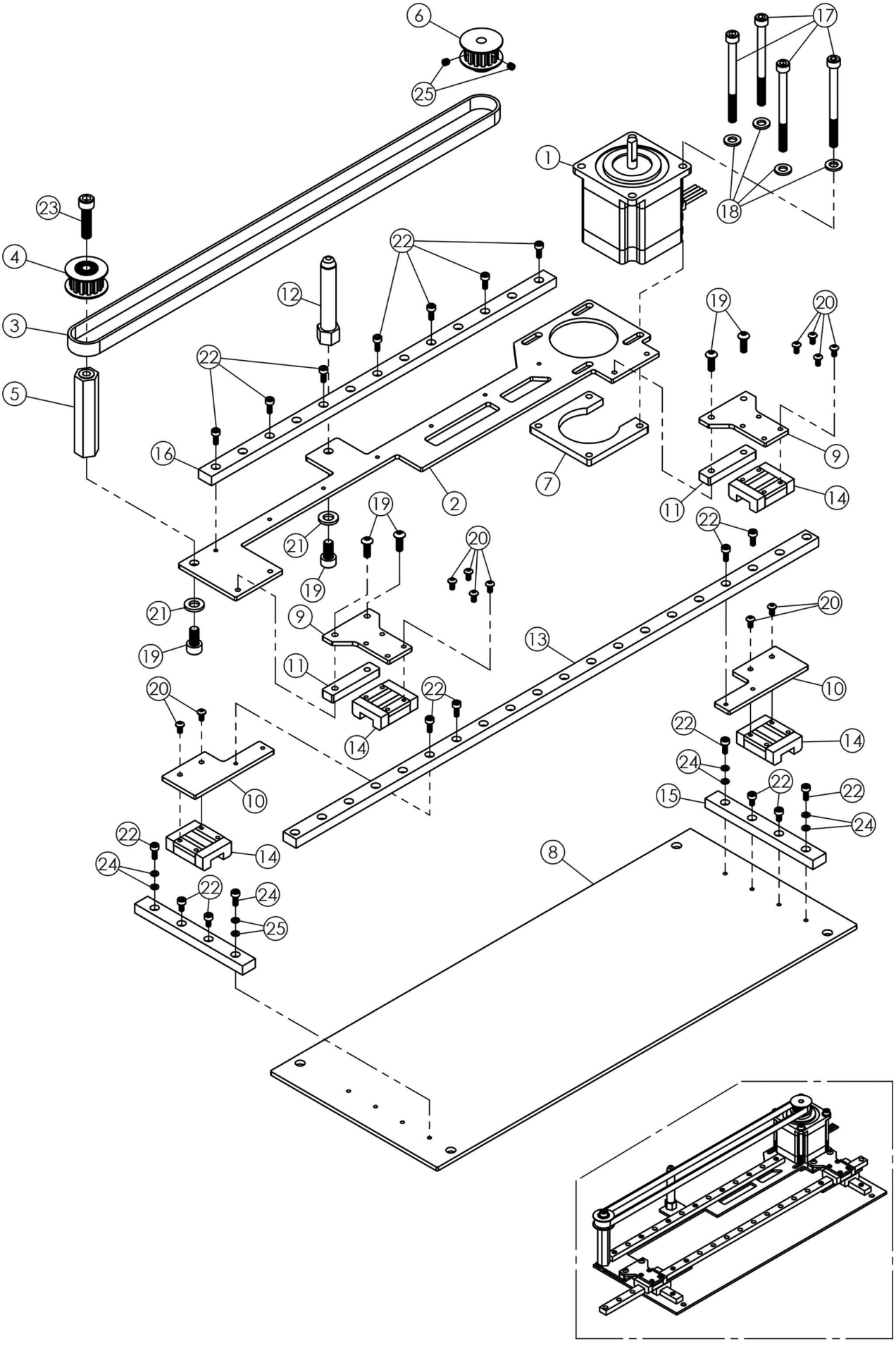
6
25
17
1
18
23
4
3
5
22
12
22
16
19
20
9
7
2
11
14
22
21
19
20
19
21
19
9
11
13
20
10
20
22
14
14
22
24
15
22
22
24
10
22
14
24
22
24
25
8

DET	PART NUMBERT	DESCRIPTION
1	10-40001-00-000	Step Motor
2	11-10086-00-000	Support Plate
3	09-60002-10-312	Belt
4	08-50001-00-000	Sub Pulley
5	11-10074-00-000	Spacer
6	08-50002-00-000	Pulley
7	11-10051-00-000	Fixing Plate
8	11-10091-00-000	Mounting Plate
9	11-10461-01-000	Mounting Support
10	11-10377-00-000	Fixing Plate
11	11-10378-00-000	Spacer
12	11-10076-00-000	Stud
13	20-10004-01-000	Linear Rail
14	20-20002-01-000	Linear Guideway
15	20-10001-01-000	Linear Rail
16	20-10003-01-000	Linear Rail
17	01-11061-05-065	Screw
18	03-11005-05-000	Washer
19	01-41014-04-012	Screw
20	01-41003-03-006	Screw
21	03-11006-06-000	Washer
22	01-11016-03-008	Screw
23	01-11071-06-025	Screw
24	03-31003-03-000	Retainer
25	01-31008-04-004	Screw

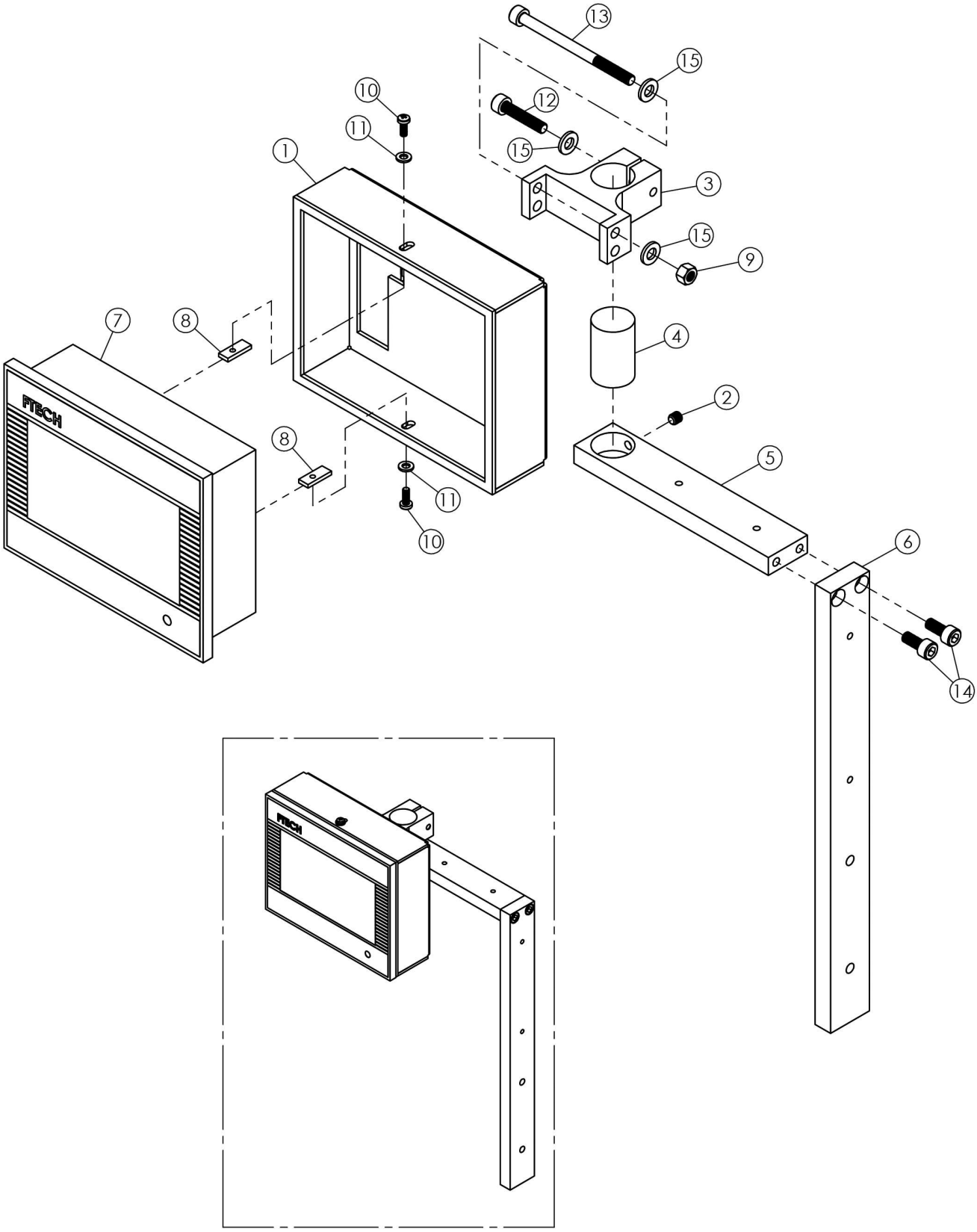
13
15
10
12
11
15
1
3
15
9
7
8
4
2
8
5
11
6
10
14
FTECH

DET	PART NUMBERT	DESCRIPTION
1	11-10127-00-000	Panel Mounting Cover
2	01-31020-05-006	Screw
3	11-10289-00-000	Panel Support
4	11-10290-00-000	Panel Holder
5	11-10287-00-000	Panel Holder
6	11-10288-00-000	Panel Holder
7	10-70001-00-9200B	Panel
8	11-10084-00-000	Cover Mounting Nut
9	02-11005-05-000	Nut
10	01-51004-03-008	Screw
11	03-11003-03-000	Washer
12	01-11053-05-025	Screw
13	01-11062-05-070	Screw
14	01-11049-05-012	Screw
15	03-11005-05-000	Washer

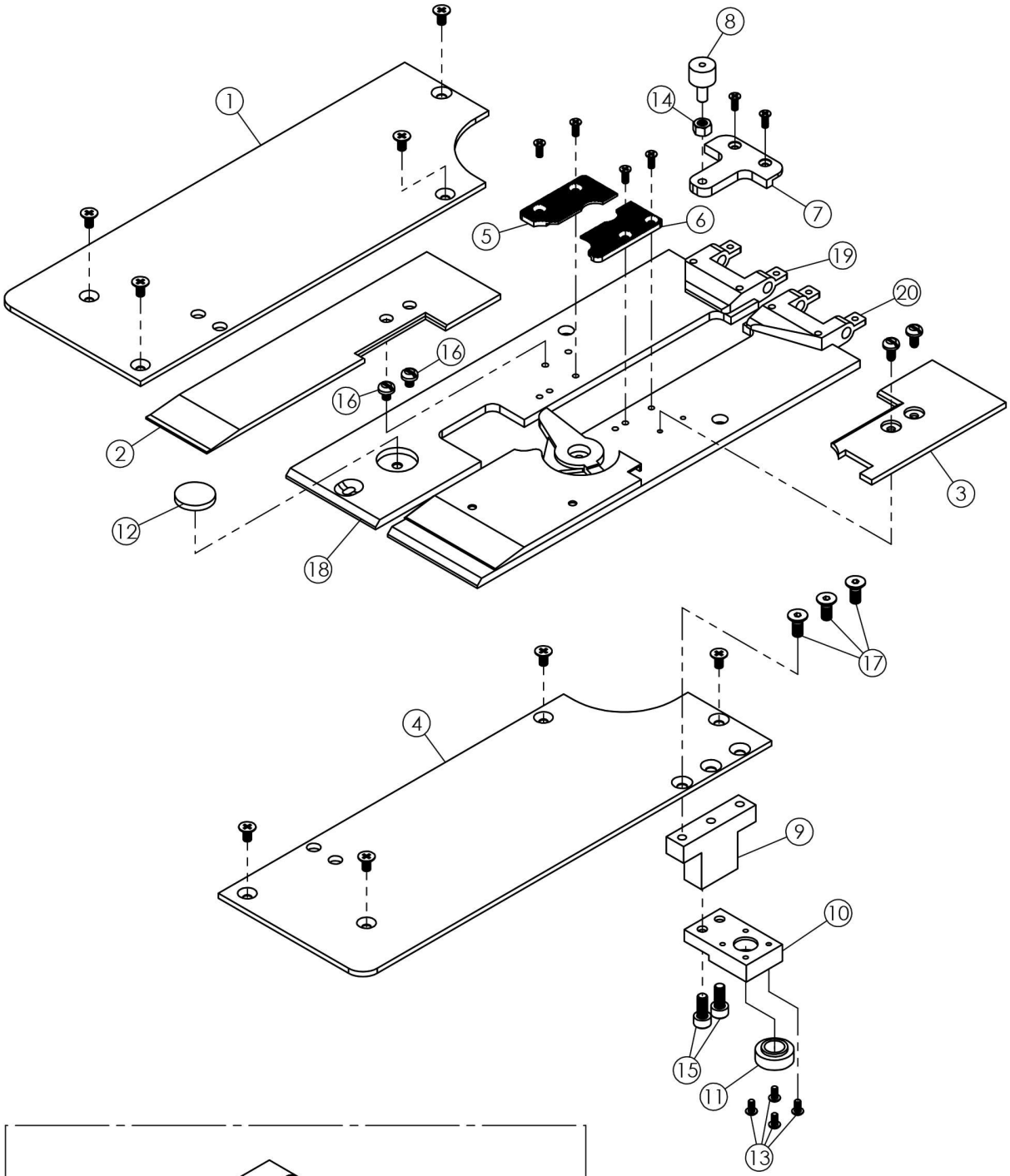
1
2
3
4
5
6
7
8
9
10
11
12
13
14
15
16
16
17
18
19
20

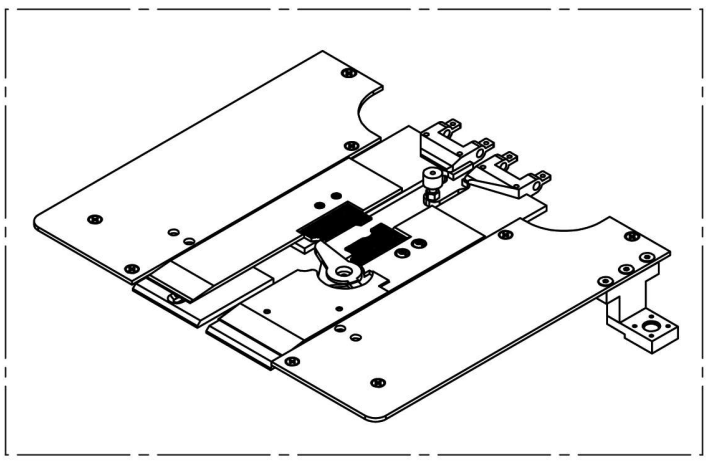

DET	PART NUMBERT	DESCRIPTION
1	11-10721-00-000	Cover Plate
2	11-10723-00-000	Cover Plate
3	11-10722-00-000	Cover Plate
4	11-10720-00-000	Cover Plate
5	11-10312-00-000	Clamp Mat
6	11-10313-00-000	Clamp Mat
7	11-10090-00-000	Bearing Holder
8	07-10015-05-013	Bearing
9	11-10637-00-000	Mouting Block
10	11-10719-00-000	Bearing Holder
11	07-10011-10-019	Bearing
12	17-50001-00-000	Magnet
13	01-41003-03-006	Screw
14	02-11005-05-000	Nut
15	01-11049-05-012	Screw
16	01-21032-04-006	Screw
17	01-51027-05-012	Screw
18	11-10828-00-000	Cover Plate
19	11-10829-00-000	Clamp Arm Holder
20	11-10830-00-000	Clamp Arm Holder

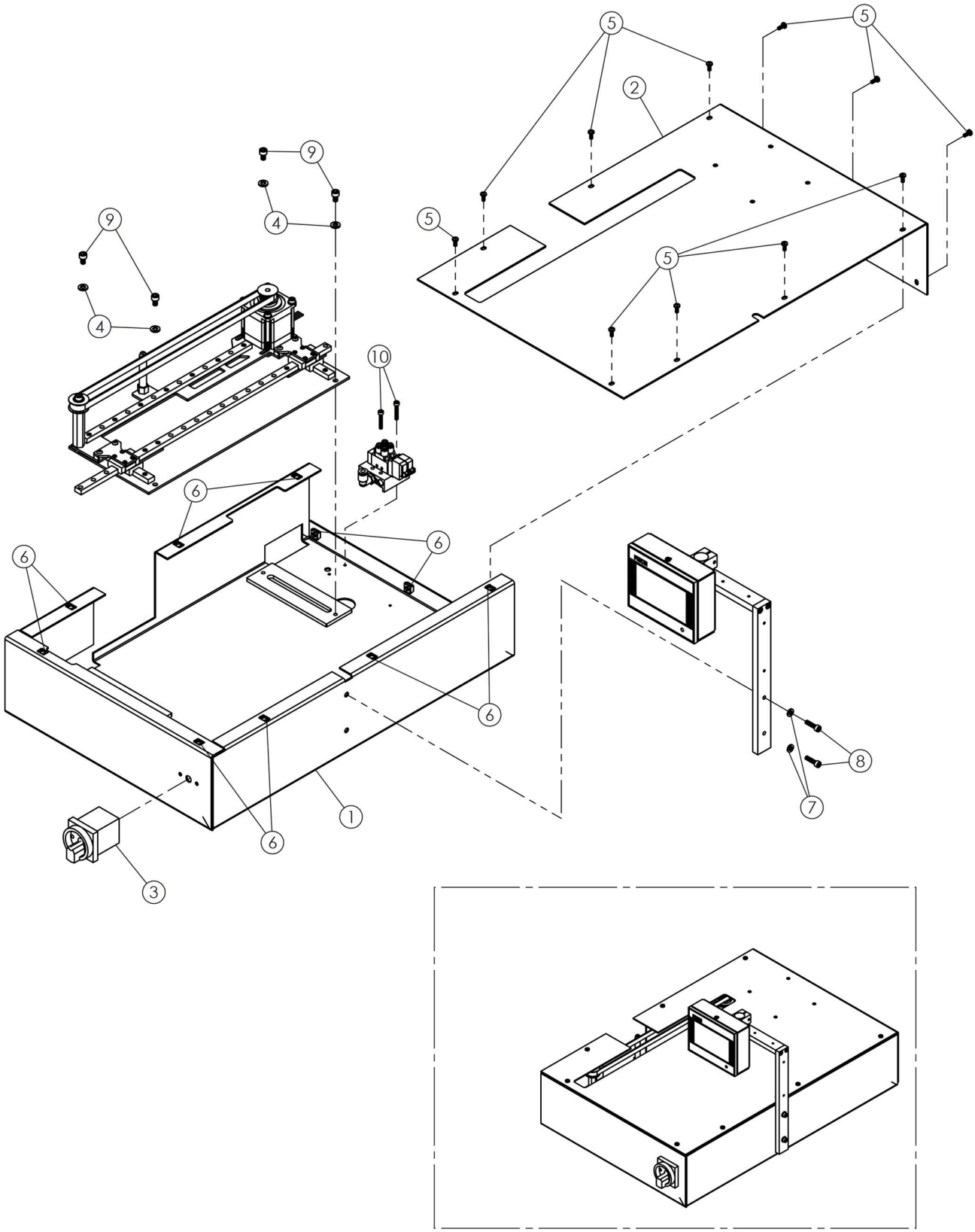
5
5
2
9
9
4
4
5
5
10
6
6
6
6
1
6
3
8
7

DET	PART NUMBERT	DESCRIPTION
1	11-70007-00-000	Board
2	11-70008-00-000	Board Cover
3	10-30001-00-000	Power Swictch
4	03-11006-06-000	Washer
5	01-21034-04-010	Screw
6	02-41002-04-000	Nut
7	03-11005-05-000	Washer
8	01-11053-05-025	Screw
9	01-11067-06-010	Screw
10	01-11040-04-025	Screw

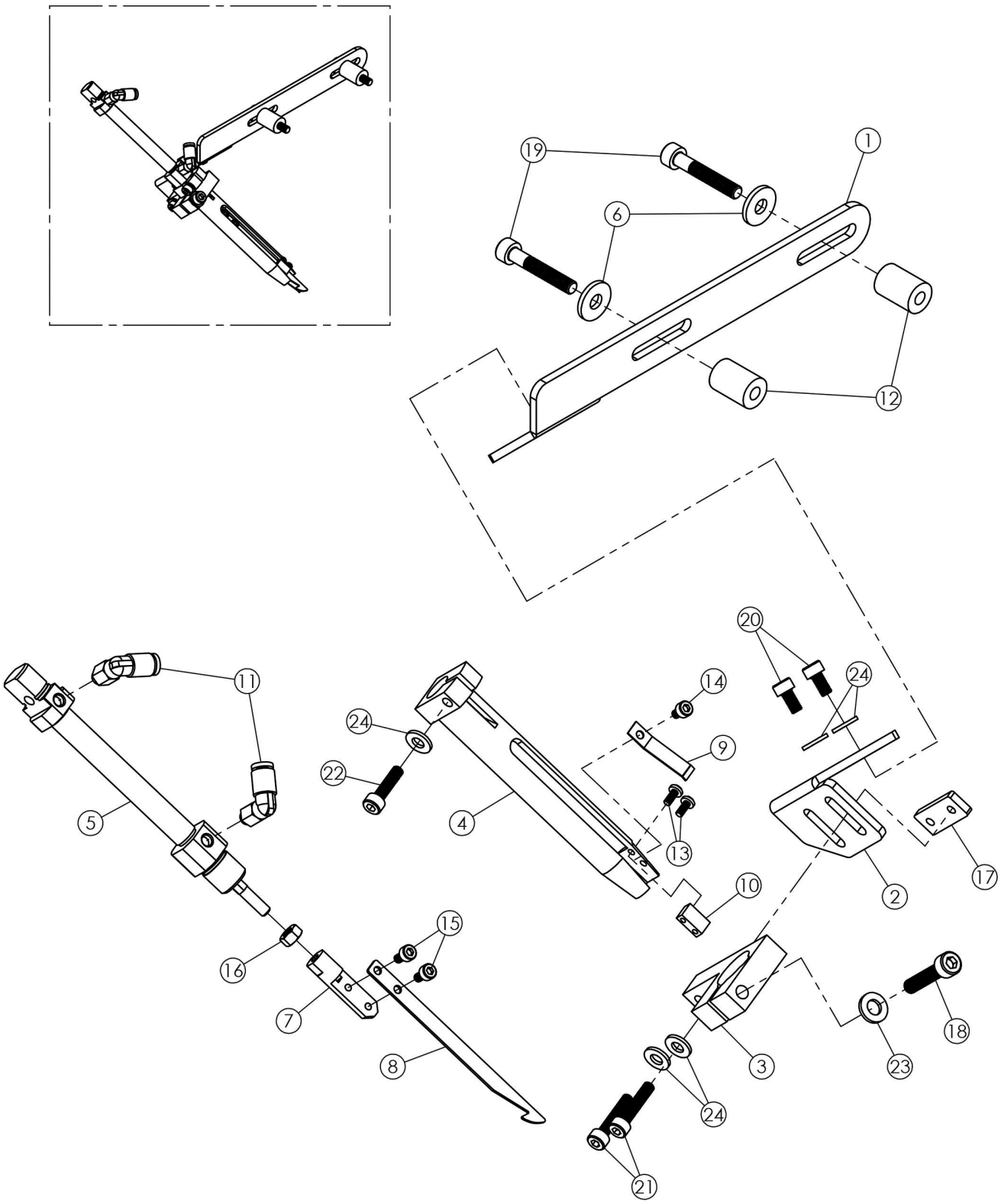
19
1
6
12
20
24
14
11
24
9
22
5
4
13
17
2
10
15
16
7
18
8
3
23
24
21

DET	PART NUMBERT	DESCRIPTION
1	11-10303-00-000	Cylinder Mounting Plate
2	11-10304-00-000	Mounting Bracket
3	11-10305-00-000	Puller Guide Holder
4	11-10306-00-000	Thread Puller Guide
5	16-10027-00-100	Cylinder
6	03-21004-05-020	Washer
7	11-10307-00-000	Knife Holder
8	11-10309-00-000	Thread Puller
9	11-10310-00-000	Thread Holder
10	11-10308-00-000	Thread Holder Block
11	16-30006-05-204	Elbow Joint
12	11-10311-00-000	Spacer
13	01-21009-25-006	Screw
14	01-11014-03-005	Screw
15	01-11015-03-006	Screw
16	02-11004-04-000	Nut
17	11-10737-00-000	Fixing Plate
18	01-11053-05-025	Screw
19	01-11054-05-030	Screw
20	01-11033-04-008	Screw
21	01-11038-04-020	Screw
22	01-11037-04-016	Screw
23	03-11005-05-000	Washer
24	03-11004-04-000	Washer

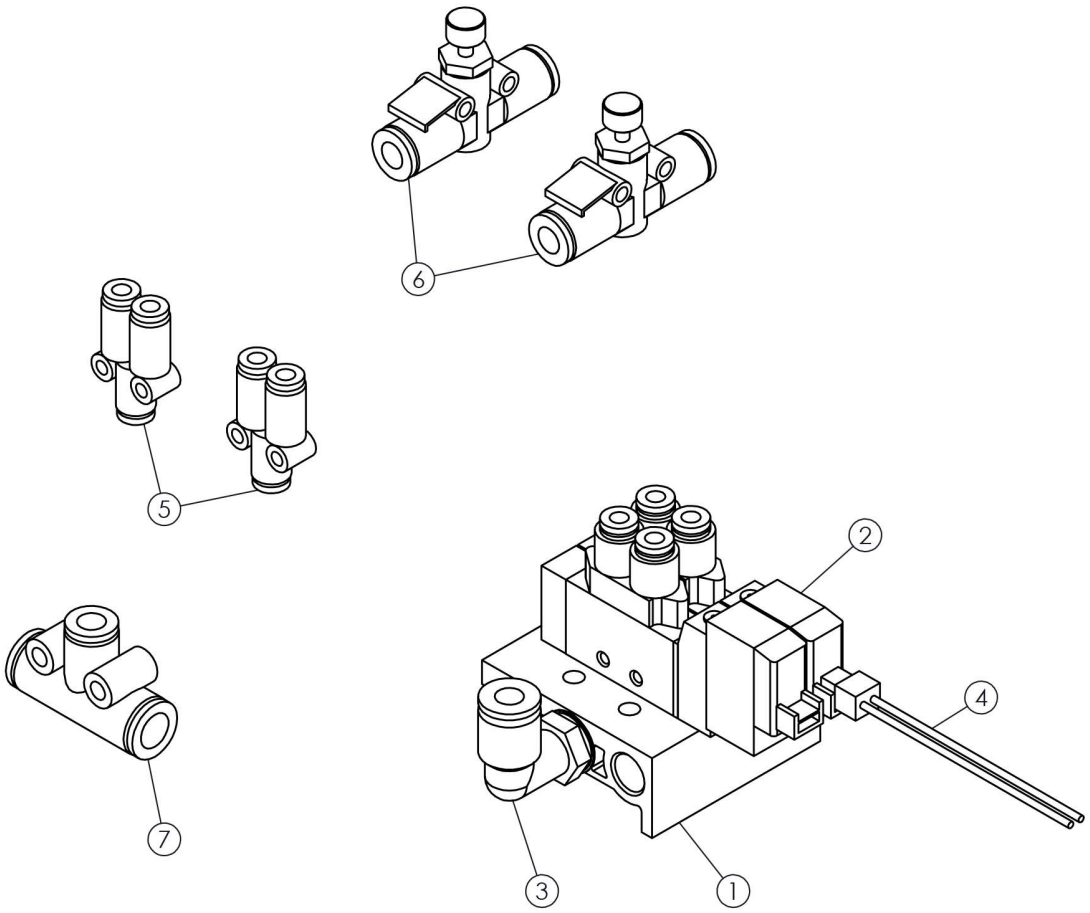
6
5
2
4
7
3
1

DET	PART NUMBERT	DESCRIPTION
1	16-70019-05-002	Air Valve Plate
2	16-20001-00-104	Valve
3	16-30005-18-206	Elbow Joint
4	10-20001-00-000	Valve Cable
5	16-30010-00-404	Y - Joint
6	16-40009-00-304	Speed Controller
7	16-30021-06-508	T - Joint

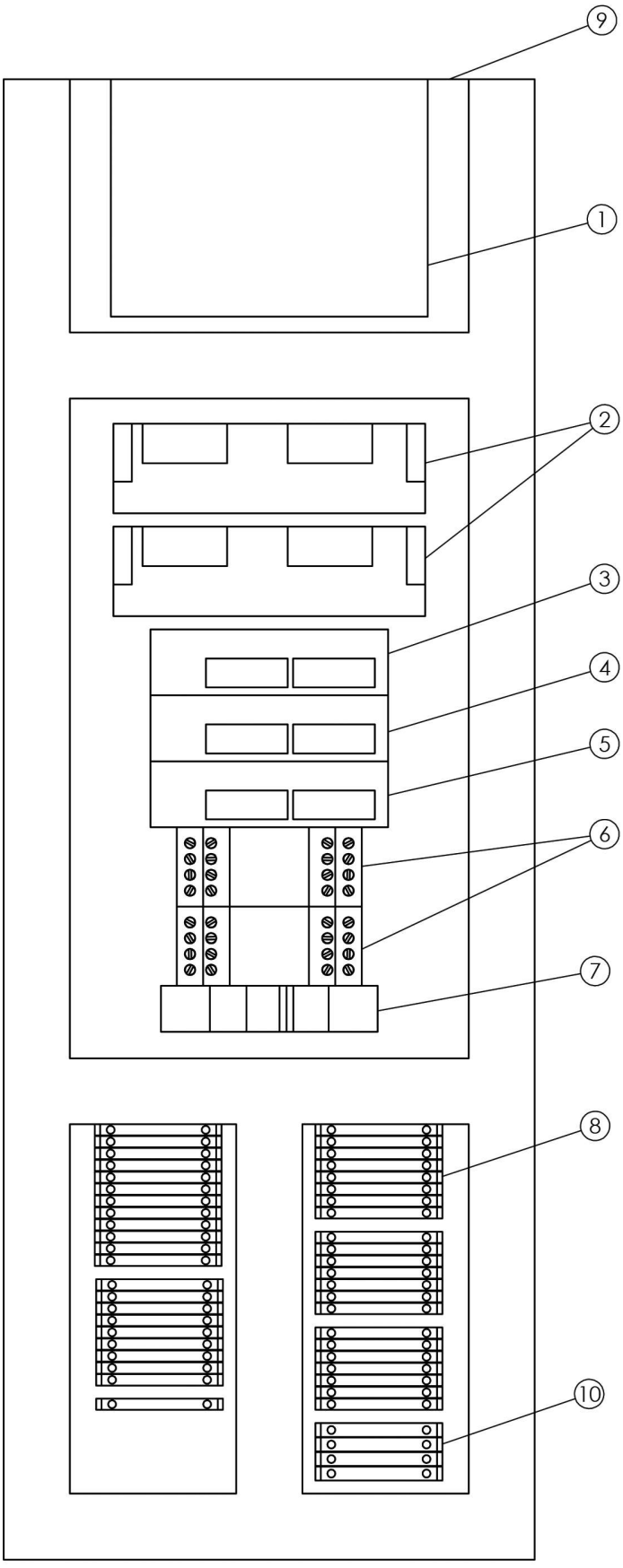
9
1
2
3
4
5
6
7
8
10

DET	PART NUMBERT	DESCRIPTION
1	10-30014-00-000	Power Board
2	10-40022-00-000	Step Motor Driver
3	10-40013-00-9200B	Plc
4	10-40025-00-000	Analog Card
5	10-40015-00-000	I/O Module
6	10-30008-00-000	Contact Relay
7	10-30012-00-000	Fuse
8	10-10004-00-000	Terminal
9	11-70009-00-000	Mouning Plate
10	10-10005-00-000	Terminal

PART NUMBERT	PAGE	DETAIL
01-11014-03-005	01	15
01-11014-03-005	08	14
01-11015-03-006	02	28
01-11015-03-006	08	15
01-11016-03-008	03	26
01-11016-03-008	04	22
01-11017-03-010	02	32
01-11018-03-012	02	43
01-11023-03-025	01	1
01-11033-04-008	02	24
01-11033-04-008	03	20
01-11033-04-008	08	20
01-11034-04-010	03	21
01-11035-04-012	01	10
01-11035-04-012	03	19
01-11037-04-016	03	22
01-11037-04-016	08	22
01-11038-04-020	08	21
01-11040-04-025	07	10
01-11049-05-012	05	14
01-11049-05-012	06	15
01-11053-05-025	05	12
01-11053-05-025	07	8
01-11053-05-025	08	18
01-11054-05-030	08	19
01-11061-05-065	03	17
01-11061-05-065	04	17
01-11062-05-070	05	13
01-11067-06-010	07	9
01-11071-06-025	04	23

PART NUMBERT	PAGE	DETAIL
01-21009-25-006	08	13
01-21032-04-006	06	16
01-21034-04-010	07	5
01-31008-04-004	03	29
01-31008-04-004	04	25
01-31020-05-006	05	2
01-31036-06-006	02	26
01-41003-03-006	04	20
01-41003-03-006	06	13
01-41014-04-012	04	19
01-51004-03-008	05	10
01-51005-03-010	02	38
01-51013-04-006	02	40
01-51013-04-006	02	46
01-51015-04-010	03	24
01-51019-04-020	01	21
01-51027-05-012	06	17
01-51028-05-016	03	25
01-90002-06-025	01	23
02-11004-04-000	02	35
02-11004-04-000	08	16
02-11005-05-000	05	9
02-11005-05-000	06	14
02-41002-04-000	07	6
02-91001-08-000	03	4
02-91008-08-125	02	42
03-11003-03-000	01	16
03-11003-03-000	03	27
03-11003-03-000	05	11
03-11004-04-000	01	9

PART NUMBERT	PAGE	DETAIL
03-11004-04-000	03	23
03-11004-04-000	08	24
03-11005-05-000	03	18
03-11005-05-000	04	18
03-11005-05-000	05	15
03-11005-05-000	07	7
03-11005-05-000	08	23
03-11006-06-000	04	21
03-11006-06-000	07	4
03-21004-05-020	08	6
03-31003-03-000	04	24
04-50001-03-000	02	36
05-20007-00-000	01	13
05-20008-00-000	01	14
07-10011-10-019	06	11
07-10015-05-013	06	8
08-50001-00-000	04	4
08-50002-00-000	04	6
08-50006-00-000	03	7
09-60002-10-312	04	3
09-60003-10-080	03	9
10-10004-00-000	10	8
10-10005-00-000	10	10
10-20001-00-000	09	4
10-30001-00-000	07	3
10-30008-00-000	10	6
10-30012-00-000	10	7
10-30014-00-000	10	1
10-40001-00-000	03	1
10-40001-00-000	04	1

PART NUMBERT	PAGE	DETAIL
10-40013-00-9200B	10	3
10-40015-00-000	10	5
10-40020-00-000	03	8
10-40022-00-000	10	2
10-40025-00-000	10	4
10-50009-00-000	03	3
10-70001-00-9200B	05	7
11-10051-00-000	04	7
11-10073-00-000	03	16
11-10074-00-000	04	5
11-10075-00-000	03	11
11-10076-00-000	04	12
11-10084-00-000	05	8
11-10086-00-000	04	2
11-10090-00-000	06	7
11-10091-00-000	04	8
11-10095-00-000	03	12
11-10127-00-000	05	1
11-10213-00-000	03	5
11-10286-00-000	01	7
11-10287-00-000	05	5
11-10288-00-000	05	6
11-10289-00-000	05	3
11-10290-00-000	05	4
11-10294-00-000	01	17
11-10295-00-000	01	18
11-10296-00-000	01	20
11-10297-00-000	01	19
11-10299-00-000	01	8
11-10300-00-000	01	6

PART NUMBERT	PAGE	DETAIL
11-10301-00-000	02	37
11-10302-00-000	03	2
11-10303-00-000	08	1
11-10304-00-000	08	2
11-10305-00-000	08	3
11-10306-00-000	08	4
11-10307-00-000	08	7
11-10308-00-000	08	10
11-10309-00-000	08	8
11-10310-00-000	08	9
11-10311-00-000	08	12
11-10312-00-000	06	5
11-10313-00-000	06	6
11-10376-00-000	03	10
11-10377-00-000	04	10
11-10378-00-000	04	11
11-10388-00-000	01	22
11-10461-01-000	04	9
11-10611-00-000	02	34
11-10637-00-000	06	9
11-10717-00-000	03	14
11-10718-00-000	03	15
11-10719-00-000	06	10
11-10720-00-000	06	4
11-10721-00-000	06	1
11-10722-00-000	06	3
11-10723-00-000	06	2
11-10724-00-000	02	27
11-10726-00-000	01	5
11-10727-00-000	01	4
11-10728-00-000	01	11
11-10729-00-000	02	29
11-10730-00-000	02	31

PART NUMBERT	PAGE	DETAIL
11-10731-00-000	01	12
11-10736-00-000	03	28
11-10737-00-000	08	17
11-10826-00-000	03	6
11-10827-00-000	02	41
11-10828-00-000	06	18
11-10829-00-000	06	19
11-10830-00-000	06	20
11-70007-00-000	07	1
11-70008-00-000	07	2
11-70009-00-000	10	9
15-80003-00-000	02	45
16-10026-00-100	02	39
16-10027-00-100	08	5
16-10039-00-200	01	2
16-20001-00-104	09	2
16-30005-18-206	09	3
16-30006-05-204	08	11
16-30010-00-404	09	5
16-30012-05-104	02	44
16-30020-05-204	01	3
16-30021-06-508	09	7
16-40009-00-304	09	6
16-70019-05-002	09	1
17-10006-04-000	02	25
17-50001-00-000	06	12
20-10001-01-000	04	15
20-10002-01-000	02	33
20-10003-01-000	04	16
20-10004-01-000	04	13
20-20002-01-000	02	30
20-20002-01-000	03	13
20-20002-01-000	04	14

FTECH

Dikiş Otomat Sistemleri

Orta Mah/ Maltepe Cad. Emintaş Akel İş Merkezi No:10/224 Bayrampaşa / İSTANBUL - TÜRKİYE
Tel:+90 212 505 98 91 / 92 - Faks: +90 212 505 98 93 - İnfo@untasmakina.com